Richmond
FURNITURE

WELCOME TO YOUR NEW KITCHEN

INFINITY BY RICHMOND FURNITURE
REGENCY BY RICHMOND FURNITURE
PURITY BY RICHMOND FURNITURE
LIBERTY BY RICHMOND FURNITURE
EIGHTY7 BY RICHMOND FURNITURE

CONTENTS

04 WELCOME

- Your kitchen owner guide

06 LOOKING AFTER YOUR KITCHEN

- General kitchen care
- Care for solid wood and/or veneered kitchens
- Care for laminate, melamine and vinyl kitchens
- Care for hand painted kitchens

09 WORKTOP CARE

- Laminate worktops
- Granite worktops
- Solid surface worktops
- Compac quartz worktops

12 APPLIANCES & SINKS

- Oven care
- Dishwasher care
- Fridge & freezer care
- Extractor care
- Stainless steel sinks
- Ceramic sinks
- Composite sinks

15 DOOR & DRAWER ADJUSTMENT

- Door adjustment
- Premier drawer box adjustment
- Premier plus drawer box adjustment
- Premier deluxe drawer box adjustment

WELCOME

Your new kitchen has been made to the highest standard, right here in the UK. This booklet has been designed to give you tips on how to look after your kitchen and also provide the correct contact details should you need them.

If you need assistance or wish to purchase any additional items or replacement parts, please call **01457 767 000** or email **aftercare@richmond-furniture.co.uk**.

YOUR KITCHEN OWNERS GUIDE

Richmond Furniture Limited is an established, privately owned family business renowned for the quality of its superior kitchens.

Working to the highest standards, Richmond has achieved an excellent reputation as a first-choice supplier within a wide range of market sectors.

We hope you are delighted with your new Richmond kitchen, and have listed a few tips on how to keep it looking good for years to come. You can rest assured with a Richmond kitchen.

At Richmond, we build our kitchens with both style and durability in mind and we are extremely proud of the accreditations we hold.

BS EN Quality Standards

Accreditation to this standard provides assurance that our products and services satisfy specific quality requirements and place emphasis on an environmental management system.

Forest Stewardship Council®

By purchasing products with the FSC® label, you are supporting the growth of responsible forest management worldwide.*
*only carcass is FSC® certified

Environmental Standards

Corporate, social and environmental responsibility is at the heart of our operations. We are fully committed to protecting the environment and we are continually looking for new ways to improve the environmental performance of all our trading activities.

Richmond Kitchens are proud to manufacture right here in the UK, at a state of the art manufacturing facility, so you can be sure of superior quality and durability.

GREAT BRITISH FURNITURE
SINCE 1987

7KH NLWFKHQ LV WKH KXE RI DQ\ KRPH DQG DV VXFK ZLOO EH LQ FRQVWDQW XVH 2XU NLWFKHQV DUH GHVLJQHG WR SURYLGH PDQ\ \HDUV RI UHOLDEOH VHUYLFH 7R KHOS NHHS \RXU NLWFKHQ LQ WKH EHVW SRVVLEOH FRQGLWLRQ SOHDVH IROORZ WKHVH VLPSOH JXLGHOLQHV

*(1(5$/ .,7&+(1 &$5(

‡ $V ZLWK DOO NLWFKHQ IXUQLWXUH WKH PRVW FRPPRQ SUREOHPV RFFXU DV D UHVXOW RI H[FHVVLYH RU SURORQJHG H[SRVXUH WR KHDW DQG RU PRLVWXUH $OZD\V HQVXUH WKDW ZDWHU LV QRW OHIW DURXQG VLQN DUHDV DV GDPDJH FDXVHG DV D UHVXOW LV QRW FRYHUHG E\ WKH JXDUDQWHH $OZD\V ZLSH RII DQ\ H[FHVV PRLVWXUH

‡ %H FDUHIXO ZLWK H[WUHPH KHDW VRXUFHV VXFK DV NHWWOHV RYHQV DQG WRDVWHUV ,W LV UHFRPPHQGHG WKDW WKHVH KHDW VRXUFHV DUH QRW SODFHG GLUHFWO\ XQGHU ZDOO XQLWV ZKHQ WKH\ DUH LQ XVH WKH\ JHQHUDWH D KLJKHU OHYHO RI KHDW DQG PRLVWXUH WKDQ LV RIWHQ DSSUHFLDWHG DQG FDQ TXLFNO\ OHDG WR XQH[SHFWHG GDPDJH RI WKH IXUQLWXUH

‡ 'RQ W SODFH DSSOLDQFHV WKDW FUHDWH VWHDP H J D VWHDPHU FRIIHH PDNHU RU NHWWOH XQGHUQHDWK WKH FDELQHWV 7KH VWHDP JHQHUDWHG E\ WKHVH DSSOLDQFHV FDQ HDVLO\ GDPDJH WKH FDELQHW DQG GRRUV

‡ 'RQ W RSHQ WKH GRRU RI D GLVKZDVKHU LPPHGLDWHO\ DIWHU WKH SURJUDPPH KDV HQGHG DV H[SRVXUH WR KHDW DQG WKH KLJK KXPLGLW\ LQFUHDVHV WKH ULVN WKDW WKH ZRUNWRS RU GRRU PD\ DEVRUE PRLVWXUH DQG VZHOO

‡ ,I XVLQJ JODVV FOHDQHU WR FOHDQ \RXU JODVV GRRUV EH FDUHIXO QRW WR GDPDJH WKH GRRUV ZKHQ \RX DUH FOHDQLQJ FOHDQ WKH GRRUV ÀUPO\ EXW JHQWO\ 1HYHU VSUD\ JODVV FOHDQHU GLUHFWO\ RQWR WKH JODVV RU FDELQHW DV WKLV FDQ GDPDJH WKH FDELQHW ,QVWHDG VSUD\ D VPDOO DPRXQW RI FOHDQHU RQWR D OLQW IUHH FORWK RU SDSHU WRZHO WKHQ ZLSH WKH JODVV

‡ 7KH FRORXU RI GRRUV DQG GUDZHU IURQWV PD\ DSSHDU PLVPDWFKHG 7KLV DSSDUHQW PLVPDWFK LV VRPHWLPHV WKH HIIHFW RI GLIIHULQJ OLJKW FRQGLWLRQV ZLWKLQ \RXU NLWFKHQ NQRZQ DV PHWDPHULVP 7R FKHFN \RXU GRRUV DQG IDVFLD \RX VKRXOG SODFH WKHP VLGH E\ VLGH LQ QDWXUDO GD\OLJKW IRU FRPSDULVRQ

‡ 3OHDVH QRWH WKDW DIWHU D SHULRG RI WLPH LW LV TXLWH QRUPDO IRU WKH FRORXU RI NLWFKHQ XQLWV WR PHOORZ 7KLV LV QRW D PDQXIDFWXULQJ IDXOW LW LV D UHVXOW RI H[SRVXUH WR OLJKW 7KLV PHDQV WKDW DQ\ DGGLWLRQDO SDUWV VXEVHTXHQWO\ RUGHUHG IRU \RXU NLWFKHQ RU VXSSOLHG DV UHSODFHPHQWV XQGHU ZDUUDQW\ PD\ LQLWLDOO\ DSSHDU QRW WR EH D FRPSOHWH FRORXU PDWFK +RZHYHU DQ\ DGGLWLRQDO SDUWV VXSSOLHG ZLOO DOVR PHOORZ RYHU WLPH WR EOHQG ZLWK \RXU H[LVWLQJ XQLWV

/ 2 2 . , 1 *
$) 7 (5 < 2 8
. , 7 & + (1

&$5( )25 62/,' :22' $1' 25 9(1((5(' .,7&+(16

'XVW NLWFKHQ FDELQHWV ZLWK KHDYH UXW HOLQWRIQJ HGHFWRUWJHQ<RX FDQ SDGV RU VWHHO ZRRO
GDPSHQ WKH FORWK VOLJKWO\ RZLWKXZDNWLWFKHQ DFDSLQH WVH7KHXWKDUVK DEUDVLYHV ZLOO
UHPRYHU 'R QRW VSUD\ GLUHFWOO\ RQ WKH WÀQLVKHG SXUFKDVH\ ZH UHFRPPHQG WKDW \RX
FOHDQLQJ HQVXUH WKDW \RX DZ\ RHGDWOH XVXUHDRH VSGVWH ZD[DQG SROLVKHV DV WKH UHVLGXH
EXLOG XS LV GLIÀFXOW WR UHPRYH

8VH RQO\ FOHDQLQJ DJHQWV WKDW DUH LQWHQGHG IRU WKH
PDWHULDOV XVHG LQ \RXU NLWFKHQ &$YRLG H[FHVVLYH DSUHQOWRQ WKDW[SRVXUH WR GLUHFW VXQOLJKW
FRQWDLQ DPPRQLD DOFRKRO KEOHDFKHV SUHUDEWRXVH DQG KLJK KXPLGLW\ DV WKHVH FDQ FDXVH
GDPDJH WR WKH ÀQLVK RI \RXU NLWFKHQ IXUQLWXUH

&OHDQ XS VSLOODJHV LPPHGLDWHO\ XVLQJ D GDPS FORWK DQG
PLOG GHWHUJHQW LI QHFHVVDU\ 1RW GLSH G QDZ XKDD PDWHULDO WDQG LWV FRORXU PD\ FKDQJH
FORWK ZLWK WLPH /LJKW ODFTXHUHG VXUIDFHV DOVR KDYH D FHUWDLQ
WHQGHQF\ WR \HOORZ ZLWK DJH GHSHQGLQJ RQ H[SRVXUH WR
'RQ W IRUJHW WR ZLSH XQGHU WKH EDVH RI WKH FDELQHWV DQG
OLJKW
WKH HGJHV RI WKH FDELQHW GRRUV

&$5( )25 /$0,1$7(0(/$0,1($1' 9,1</ .,7&+(16

3HULRGLFDOO\ FOHDQ WKH LQWHULRU RI QHGWHUWRHZLSH XQGHUF WKH FDELQHWV DQG WKH
GRRU XVLQJ D VRIW GDPS FORWH &DXWLRXV WKH VXEOLQHWV DRW WHU
FOHDQLQJ
1HYHU XVH VWURQJ GHWHUJHQWV VRDS SDGV RU VWHHO ZRRO

8VH RQO\ FOHDQLQJ DJHQWV WKDW DUH LQWHQGHG &RQWDFW &OHDQHUV &RQWDLQ &DXVWLF &KHPLFDOV &DXVH &DXVH KDUVK DEUDVLYHV ZLOO
PDWHULDOV XVHG LQ \RXU NLWFKHQ &DXVH &DXVH &DXVH

/$0,1$7(:25.7236

/DPLQDWH ZRUN VXUIDFHV DUH G:XLSHDQ DVVLOHDO/QJPHGLD:WHOH VHVSHFLDXOD FWKRRN VXUIDFH
H[WUHPHO\ IXQFWLRQDO 'XH WRL QYKRQOYDQXUHLORI WWKUHSUGRXRWRXUHXGLGVRGLWDLQVGWLOQNJVRDQ SUDFQLDOWHUZDSWLXH VXUDFH
JORVV DQG GDUNHU WH[WXUHG ZRFLNGWRSVSLQ&DUHQWXFKUHVXLUHHJDU WR SUHYHQW WKH
VSHFLDO DWWHQWLRQ WR PDLQWDLQLQJ SRLQWLHLX\UDFHWÀQDQLQJ &/($1,1*

&/($1,1*

‡ <RXU ODPLQDWH ZRUN VXUIDFH FDQ EH HDVLO\ PDLQWDLQHG E\ FOHDQLQJ ZLWK ZDWHU DQG GHWHUJHQW

‡ 2Q QRQ JORVV ZRUNWRSV SHUVLVWHQW PDUNV FDQ EH UHPRYHG XVLQJ D QRQ DEUDVLYH FUHDP FOHDQHU

‡ 3OHDVH HQVXUH WKDW ZKHQ ZLSLQJ WKH JORVV VXUIDFH WKDW WKH ZRUNWRS DQG FORWK LV FOHDQ DQG IUHH RI DQ\ GHEULV WKDW PD\ VFUDWFK WKH VXUIDFH ‡DUW VFRXULQJ SRZGHUV DQG DEUDVLYH SDGV PXVW QRW EH XVHG

35(9(17,1* '0*(

‡ 'R QRW SODFH KRW SRWV DQG SDQV GLUHFWO\ RQ WR \RXU ZRUN VXUIDFH DV WKLV PD\ FDXVH GDPDJH $OZD\V XVH VXLWDEOH SURWHFWLRQ DJDLQVW KHDW GDPDJH E\ XVLQJ D WULYHW RU D SDQ VWDQG

62/,' 685)$&(:25.7236

SRWV SDQV DQG RWKHU KHDW
DOZD\V EH SODFHG RQ D WULY
URGV WR SUHYHQW H[WUHPH
FRQWDFW ZLWK KHDW FDQ FU
ÀQH FUDFNV %RLOLQJ ZDWH
QRW KDUP WKH VXUIDFH
VKRXOG WKHQ EH ULQVHG
‡ ULQR 6FUDWFKLQJ XWHQVLO
VRPHWLPHV FDXVH VFUDWFKH
GDPDJHG E\ VFUDWFKLQJ ‡RU
XVH RI D FKRSSLQJ ERDUG LV
VFUDWFKHV FDQ HDVLO\ EH U
SDG 3OHDVH FRQWDFW WKH
HQVXUH D VXLWDEOH SURGXF
XVHG RX GRQ W KDYH D PDLQ
HDVLO\ EH SXUFKDVHG RQOLQ
LPPHGLDWHO\ DQG ULQVH WKH DUHD WKRURXJKO\

&203$&7 48$57= :25.7236

&RPSDF 4XDUW] LV D KDUG ZHDULQJ
6LPSOH URXWLQH PDLQWHQDQFH
\RXU TXDUW] ZRUNWRS RQ QJHHLGVLFDOOD
&/($1,1*

‡ 8VLQJ D VRIW FORWK RU VSRQJH ZLSH WKH VXUIDFH WRS GR QRW UHTXLUH
FOHDQ KRW VRDS\ ZDWHU WR UHPRYH DQ\ VXUIDFH GLUW
‡ $YRLG DONDOLQH DQG FKORULQH EDVHG FOHDQHUV DQG GR
QRW XVH EOHDFK *UDQLWH LV HDVLO\ PDLQWDLQHG ZLWKRXW
WKH QHHG IRU VXFK BEUDVLYH FOHDQHUV

‡ :KHQ SUHSDULQJ IRRG D SURWHFWLYH FKRSSLQJ ERDUG VKRXOG DOZD\V EH XVHG WR
PDUNLQJ RI WKH ZRUN VXUIDFH

‡ 'R QRW SODFH KRW SRWV DQG SDQV GLUHFWO\ RQ WR \RXU ZRUN VXUIDFH DV WKLV PD\ FDXVH GDPDJH $OZD\V XVH VXLWDEOH SURWHFWLRQ DJDLQVW KHDW GDPDJH E\ XVLQJ D WULYHW RU D SDQ VWDQG

*5$1,7(:25.7236

*UDQLWH LV D QDWXUDO VWRQH
WKDW FDQ UHDLQ LWV VKHHQ
6LPSOH URXWLQH PDLQWHQDQFH
JUDQLWH ORRNLQJ IUHVK DQG QHZ

&/($1,1*

‡ 8VLQJ D VRIW FORWK RU VSRQJH ZLSH WKH VXUIDFH WRS GR QRW UHTXLUH
FOHDQ KRW VRDS\ ZDWHU WR UHPRYH DQ\ VXUIDFH GLUW

‡ ,I D VWDLQ LV VOLJKWO\ PRUH UHVLVWDQW WKH XVH RI PLOG RULW
QHXWUDO GHWHUJHQWV ZLOO XVXDOO\ EH VXIÀFLHQW WR UHPRYH
LW

35(9(17,1* '0*(

‡ 'R QRW SODFH KRW SRWV DQG SDQV GLUHFWO\ RQ WR \RXU ZRUN VXUIDFH DV WKLV PD\ FDXVH GDPDJH $OZD\V XVH VXLWDEOH SURWHFWLRQ DJDLQVW KHDW GDPDJH E\ XVLQJ D WULYHW RU D SDQ VWDQG

‡ 1HYHU XVH DEUDVLYH FOHDQLQJ SDGV VFRXULQJ GHWHUJHQWV DQG ZRRO ZLUH DV WKHVH
‡ ,I D VWDLQ LV VOLJKWO\ PRUH UHVLVWDQW WKH XVH RI PLOG DQG QHXWUDO GHWHUJHQWV ZLOO XVXDOO\ EH VXIÀFLHQW WR UHPRYH DQ\ VXUIDFH GLUW
‡ $YRLG DONDOLQH DQG FKORULQH EDVHG FOHDQHUV DQG GR QRW XVH EOHDFK *UDQLWH LV HDVLO\ PDLQWDLQHG ZLWKRXW WKH QHHG IRU VXFK BEUDVLYH FOHDQHUV

‡ :KHQ SUHSDULQJ IRRG D SURWHFWLYH FKRSSLQJ ERDUG VKRXOG DOZD\V EH XVHG WR PDUNLQJ RI WKH ZRUN VXUIDFH

‡ $OZD\V XVH VXLWDEOH SURWHFWLRQ DJDLQVW KHDW GDPDJH E\ XVLQJ D WULYHW RU D SDQ VWDQG

‡ 1HYHU XVH DEUDVLYH FOHDQLQJ SDGV VFRXULQJ GHWHUJHQWV DQG ZRRO ZLUH DV WKHVH
‡ $YRLG DONDOLQH DQG FKORULQH EDVHG FOHDQHUV DQG GR QRW XVH EOHDFK &RPSDF 4XDUW] ZRUNWRS RQ QJHHLGVLFDOOD
‡ :KHQ SUHSDULQJ IRRG D SURWHFWLYH FKRSSLQJ ERDUG VKRXOG DOZD\V EH XVHG WR PDUNLQJ RQ WKH ZRUN VXUIDFH

$33/,$1&(6 6,1.6

$33/,$1&(6

,W LV HVVHQWLDO \RX WKRURXJKOO\ UHDG WKH LQVWUXFWLRQV IRU HYHU\ DSSOLDQFH LQFRUUHFWO\ FRXOG &DXVH DQG YRLG \RXU ZDUUDQW\ ,I \RXU DSSOLDQFH UHTXLUHV UHSDLU VHUYLFH R PDLQWHQDQFH SOHDVH RQO\ XVH DQ DXWKRULVHG HQJLQHHU DJDLQ WKLV FRXOG DIIHFW WKH VDIHW WKH PDQXIDFWXUHU V ZDUUDQW\

29(1&$5(

‡ (QVXUH WKH KRE EH LW JDV QRW OHIW RQ DIWHU XVH 7KLV RPW EXW FDQ GDPDJH NLWFKHQ XQLWV LQ WKH LW

‡ 1HYHU RSHUDWH WKH RYHQ ZLWK WKH GRRU RSHQ RQO\ ZLOO WKLV UHGXFH RY HQHUJ\ DQG FDQ FDXVH GDPDJ

‡ .HHS WKH RYHQ FOHDQ <HV MRE EXW ZKHWKHU \RX GR LW SURIHVVLRQDOO\ FOHDQHG ORRNLQJ JUHDW EXW KHOS PD

',6+:$6+(5&$5(

‡ 6FUDSH IRRG GHEULV IURP SRWV DQG GLVKHV EHIRUH WKH JR LQWR WKH GLVKZDVKHU /DUJH SDUWLFOHV RI IRRG ZDVW FDQ FORJ WKH FOHDQLQJ DUPV DQG FDXVH SUHPDWXUH IDLOXUH RI WKH GLVKZDVKHU

‡ 2QO\ XVH GHWHUJHQW GHVLJQHG IRU D GLVKZDVKHU 8VLQJ DQ\ RWKHU SURGXFWV FDQ FDXVH EXLOG XS DQG GDPDJH WKH GLVKZDVKHU SRWHQWLDOO\ FDXVLQJ IDLOXUH DQG YR DQ\ ZDUUDQW\

‡ $OZD\V ZDLW DW OHDVW PLQXWHV DIWHU WKH GLVKZDVKH F\FOH KDV ÀQLVKHG IRU WKH KHDW DQG VWHDP WR GLVSHU

)5,'*(&)5((=(5&$5(

‡)RRG+RW IRRG QHHGV WR EH EURXJKW GRZQ WR URRP WHPSHUDWXUH EHIRUH EHLQJ SODFHG LQ WKH IULGJH WR DYRLG UDLVLQJ WKH RYHUDOO WHPSHUDWXUH RI WKH IU)RRG VKRXOG EH FRYHUHG EHIRUH VWRULQJ LQ WKH IULGJH WR DYRLG VSRLOLQJ $OZD\V WUDQVIHU IRRG IURP FDQV LQ VHDOHG FRQWDLQHUV RU LQ D FRYHUHG ERZO ,I OHIWRYHU

'225 '5$:(5 $'-8670(1

6,1.6

7KH VLQN LV SHUKDSV RQH RI WKH PRVW FRPPRQ WDONV DQG WKH NLWFKHQ VR WDNLQJ JRRG FDUH RI LWV FRQGLWLRQ LV HDV\ &RQWDF\ XV LI QHHG ULQVH WKH VLQN WKRURXJKO

67$,1/(66 67((/ 6,1.6

‡ 0DQ\ KRXVHKROG FOHDQHUV FRQWDLQ FKORULGHV 2QFH \RX KDYH FRPSOHWHG FOHDQLQJ DOZD\V RDNH VXUH \RX ULQVH WKH VLQN ZLWK KRW ZDWHU

‡ $Q\ DEUDVLYH FOHDQLQJ LPSOHPHQWV VXFK DV VWHHO ZRR VKRXOG GHÀQLWHO\ EH DYRLGHG DV WKH\ FDQ VFUDWFK WK VLQN

‡ 5HPHPEHU WR VFUXE LQ WKH GLUHFWLRQ RI WKH SRLVK OLQHV WR EOHQGV ZLWK WKH H[LVWLQJ SRLVK OLQHV RI W VLQN

‡ :H ZRXOG DGYLVH WKDW \RX GU\ WKH VXUIDFH FRPSOHWHO\ WR DYRLG ZDWHU PDUNV DQG VXUIDFH UXVW

‡ $YRLG VFRXULQJ OLTXLGV WKHVH FDQ GDPDJH WKH JOD]H SRXULQJ ERLOLQJ ZDWHU GRZQ WKH VLQN FUDFNLQJ

&(5$0,& 6,1.6

‡ 5HJXODU FOHDQLQJ ZLWK KRW VRDS\ ZDWHU LV GHÀQLWHO\ SUHIHUDEOH WR KHDY\ FOHDQLQJ

SODVWLF ZDVKLQJ XS ERZOV

JOD]H XVLQJ EOHDFK DQG S

WKH VLQN WKLV FDQ FDXVH F

&2032&,7(6,1.6

‡ 6LPLODU WR FHUDPLF GDLO\ ZDWHU DQG D VRIW VSRQJH F KRXVHKROG FOHDQHUV

‡ 8VLQJ D PL[RI ZDWHU DQG UHPRYH VWXEERUQ VWDLQV DQG GU\ DIWHUZDUGV

‡ $ KHDYLO\ GLOXWHG EOHDFK EDG VWDLQV EXW DJDLQ HQ ULQVHG DQG GULHG DIWHUZD

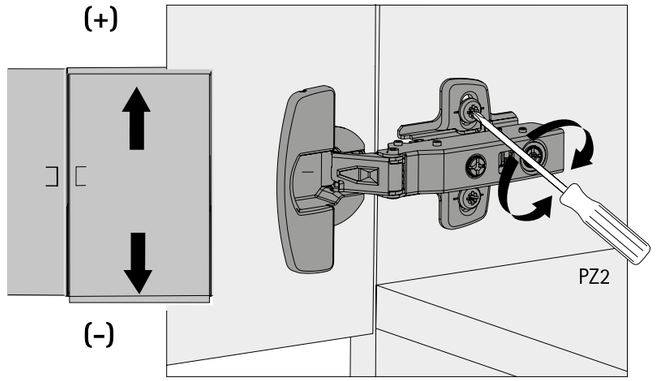

+(,*+7 $'-8670(17

+HLJKW DGMXVWPHQ GRQH E\ ORRVHQLQJ VFUHZV 7KH PRXQW VOLGH IUHHO\ LQ ER :KHQ DGMXVWHG WR UH WLJKWHQ WKH VF

'5$:(5 $'-8670(17 35(0,(5 '5$:(5 %2;

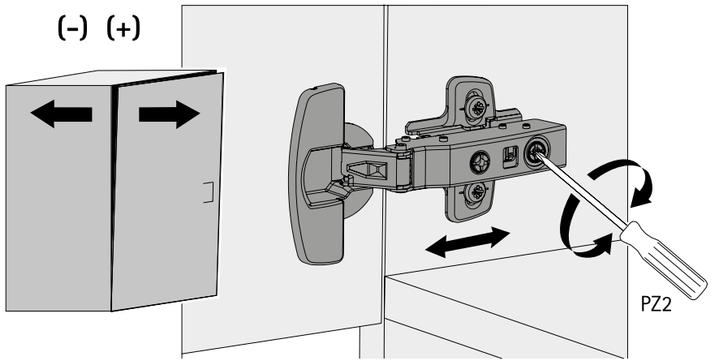

)5217 72 %$&.
$'-8670(17

%\ WXUQLQJ WKH VFUHZ VKRZQ LW LV SRVVLEOH WR DGMXVW WKH GRRU IRUZDUG RU EDFN

6,'(:$<6
$'-8670(17

7R DFKLHYH VLGHZD
WKH GUDZHU IURQW
ORRVHQHG RQ HLWK
WKH XVHU WR PRYH
PP LQ WKH OHIW RU
2QFH LQ SRVLWLRQ
EH UH WLJKWHQHG
SDQHO LQWR SODFH

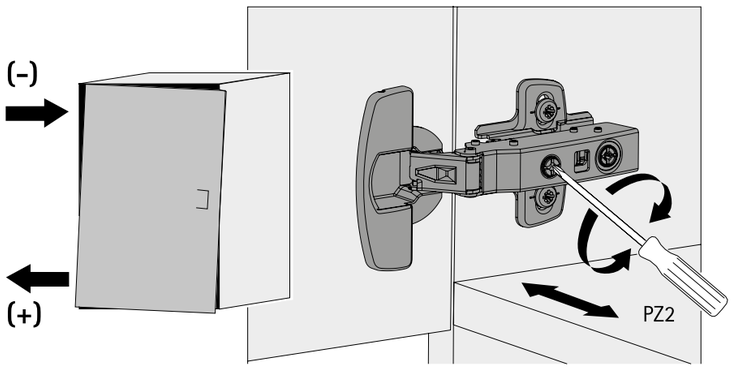

)5217 72 %$&.
$'-8670(17
6/27 7<3(+,1*(

/RRVHQ WKH VFUHZ VKRZQ 7KH RYDO VORW DOORZV WKH KLQJH WR VOLGH IUHHO\ LQ ERWK GLUHFWLRQV :KHQ DGMXVWHG WR \RXU OLNLQJ UH WLJKWHQ WKH VFUHZV

+(,*+7 $'-8670(17

7R DGMXVW WKH KHL
IURQW H[WHQG WKH
RXWZDUGV XQWLO W
VLGHV DUH YLVLEOH
VFUHZ KLJKOLJKW E
IURQWDO SDQHO ZLO
LV DGMXVWHG GRZQ
SDQHO ZLOO EH ORZ
ERWK VLGHV RI WKH
DGMXVWHG DFFRUGL
DQ\ UXQQHU PRWLRO

,167$//,1*

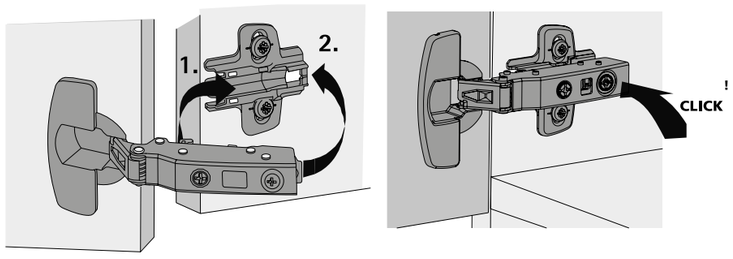

5(029,1*

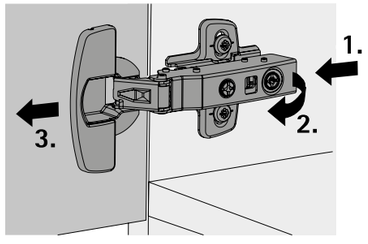

,167$//,1*
5(029,1* +,1*(

7R DWWDFK WKH KLQJH WR WKH PRXQWLQJ SODWH ORFDWH WKH KRRNV RQ WKH XQGHUVLGH RI WKH KLQJH LQWR WKH IURQW RI WKH SODWH DQG SXVK WKH ERG\ RI WKH KLQJH EDFNZDUGV XQWLO D FOLFN LV KHDUG

7R UHPRYH WKH KLQJH SUHVV LQ WKH FOLS RQ WKH HQG RI WKH KLQJH ERG\ ZKLFK ZLOO WKHQ UHOHDVH WKH KLQJH IURP LWV SODWH 2Q UHOHDVH RI WKH KLQJH EH VXUH WR WDNH WKH IXOO ZHLJKW RI WKH GRRU WR SUHYHQW LW IURP IDOOLQJ IURP WKH XQLW

'5$:(5)5217
5(029$/

7R UHPRYH WKH GUD
URWDWH WKH VFUHZ
ERWK VLGHV RI WKH
WKH IURQWDO LV VH
VFUHZV DUH ORRVHO
ZLOO EHFRPH ORRVH
IURQW FDQ QRZ VDI