PURITY

BY RICHMOND FURNITURE

WELCOME TO PURITY

Great British Furniture Since 1987

t: 01457 767000
e: **purity xpress** purity.xpress@richmond-furniture.co.uk
purity portfolio orders@richmond-furniture.co.uk
w: www.richmond-furniture.co.uk

Richmond Furniture Ltd, Regent House,
Hadfield Industrial Estate, Waterside,
Hadfield, Glossop SK13 1BS

Richmond
FURNITURE

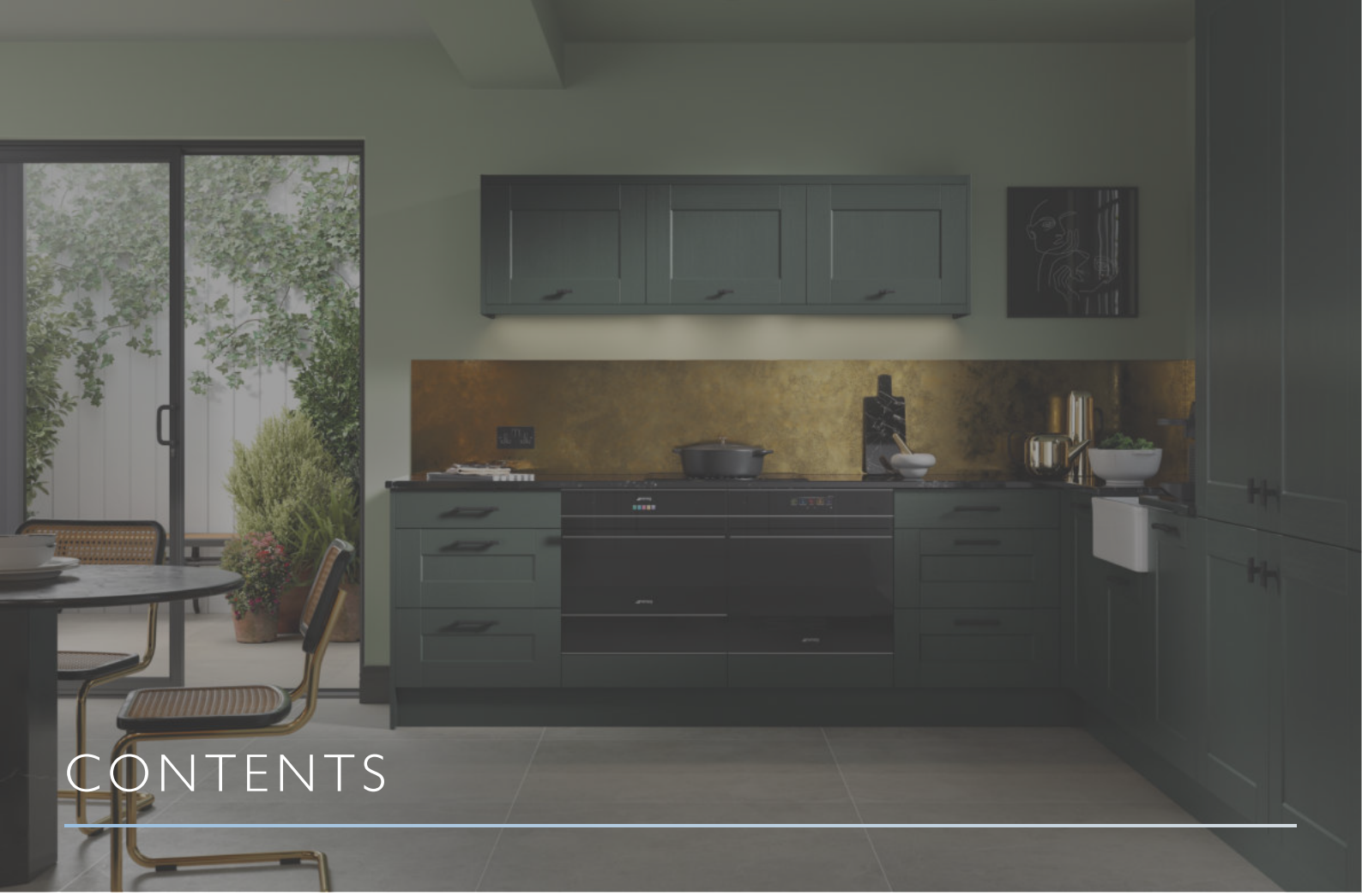

CONTENTS

03 Welcome to Purity
04 Facts and Figures
05 Why Purity?
06 Your Contacts
07 Our Design & Estimating Support
08 Our New Order Process
09 Our Confirmation Procedure
10 Our Price Files
11 Our Samples
12 Our After Sales Support
13 Our New Concept: Vicino
14 Our Brochures
15 Introduction to Purity Xpress
16 Purity Xpress Door Collection
17 Purity Xpress Cabinet Collection
18 Purity Xpress Surface Collection
19 Purity Xpress Handle Collection
20 Purity Xpress Range Content
23 Purity Vicino Range Content
27 Purity Xpress Delivery Service
28 Introduction to Purity Portfolio
29 Purity Portfolio Door Collection
31 Purity Portfolio Cabinet Collection
32 Purity Portfolio Laminate Surface Collection
33 Purity Portfolio Compact Laminate Surface Collection
34 Purity Portfolio Deklite Surface Collection
35 Purity Portfolio Solid Acrylic Surface Collection
36 Purity Portfolio Solid Quartz Surface Collection
38 Purity Portfolio Dekton Surface Collection
39 Purity Portfolio Handle Collection
40 Purity Portfolio Range Content
47 Purity Portfolio Delivery Service
48 Our Useful Documents
54 Our Important Bits
57 Our Small Print
58 Our Product
55 Welcome on Board

PURITY

BY RICHMOND FURNITURE

WELCOME TO PURITY

A warm welcome to **Purity by Richmond Furniture**.

Let us share a little about **Richmond Furniture**.

With over 35 years experience working in partnership with the UK's Private Developers, Trade Merchants, Public Sector Clients, Purpose Built Student Accommodation Providers, Built To Rent Specialists and Retailers – you are in safe hands.

We are a privately owned British manufacturer of fitted furniture. We manufacture right here in the UK from our 90,000 square foot facility in Hadfield, Derbyshire, some 13 miles from Manchester. The importance of reliable supply has never been more critical.

We have developed a reputation for producing quality backed goods with first class service support. A brand trusted by our customers, a brand with a long and rich history.

Its imperative to us that we develop a reliable but personalised service for our customers. This starts here with our **Welcome to Purity** brochure.

Purity by Richmond Furniture is our specialist brand for the Merchant and Independent Kitchen Market. The **Purity** brand is a range of high quality furniture built to the most exacting standards. We have two exciting collections for your consideration: **Purity Xpress** and **Purity Portfolio**.

Purity Xpress is a collection of 11 ranges available on our Xpress service. All of these ranges are offered on our guaranteed postcode delivery service: order Week 1 for delivery Week 2.

Purity Portfolio is a wider collection of 23 ranges available on our order Week 1 for delivery Week 4 service. Our PG8, PG9 and PG10 painted product on our order Week 1 for delivery Week 5 service.

Why not take advantage of our vast experience? Experience matter and we know what you need. We understand the importance of developing a range of furniture that both looks magnificent and performs in the same way.

This document outlines all you need to know to help you get started. If you have any questions don't hesitate to contact our team.

Purity by Richmond Furniture - *over 35 years of doing what we say we will.*

- The Richmond Directors

$ 0$18)$&785(
2))851,785(
127 $ ',675,%87
2))851,785(

)$&76),*85(6

%2$5' 72 %2; $1' '2256
5LFKPRQG)XUQLWXUH DUH D WUXH IXUQLWXUH PDQXIDFWXUHU FRQ

)281'('

67$))
0(0%(56

64)7
)$&725<

6+2:5220

75$,1,1*
+8%

&$%,1(7
0$18)$&785

.,7&+(16
3(5 '$<

3$1(/
:((./<

81,7
118//<

)851,785
%5$1'6

385,7<

:+< 385,7<"

- *UHDW %ULWLVK IXUQLWXUH VLQFH ² H[SHULHQFH PDWWHUV
- 2XU SURGXFW LV SURXGO\ PDQXIDFWXUHG ULJKW KHUH LQ *UHDW %ULWD
- :H DUH D PDQXIDFWXUHU RI NLWFKHQ IXUQLWXUH QRW D GLVWULEXWRU
- 2XU FRPSDQ\ LV ,62 ,62 DFFUHGLWHG ² DFFUHGLWDWLRQ PDWWH
- $OO SURGXFWV DUH)6& FHUWLÀHG ZH FDUH IRU RXU HQYLURQPHQW DQ
- 2XU JUHDW SURGXFW LV LQVWDOOHU IULHQGO\ DQG VXSSOLHG IXOO\ UL IDFWRU\ LQVWDOOHG ² PDNLQJ LW HDV\ PDWWHUV
- 'HOLYHU\ ZLOO EH)2& ² FRQYHQLHQFH PDWWHUV
- $OO SURGXFW GHOLYHUHG ZLWK EHVSRNH SDFNDJLQJ DV VWDQGDUG ² SU
- 3ODQ FKHFNLQJ VHUYLFH DYDLODEOH IRU DOO ÀUVW RUGHUV ² KHOS PD\
- (VWLPDWLQJ VHUYLFH IRU DOO SURMHFWV RI RU PRUH SORWV ² WDNLQ
- 3XULW\ E\ 5LFKPRQG)XUQLWXUH RIIHU VRPHWKLQJ XQLTXH ZH SURYLGH SURYLGLQJ WKH SURMHFW LV RU PRUH SORWV ² LQVWDOODWLRQ PDWW
- &RPSUHKHQVLYH GLVSOD\ VWDQGV DQG VDPSOHV DYDLODEOH ² ORRNLQJ
- \HDU JXDUDQWHH RQ DOO IXUQLWXUH ² SHDFH RI PLQG PDWWHUV

:+< 385,7< ;35(66"

- 3XULW\ ;SUHVV EURFKXUH DQG SULFH OLVW DYDLODEOH
- 3XULW\ ;SUHVV SURGXFW PDQXDO DYDLODEOH
- 5LJLG NLWFKHQ GHOLYHU\ E\ ZRUNLQJ GD\
- *XDUDQWHHG SRVWFRGH GHOLYHU\ GD\ VR \RX ZLOO DOZD\V NQRZ \RXU
- 5HPHGLDO IDVW WUDFN VHUYLFH E\ FDUULHU RU SRVWFRGH JXDUDQWHH
- 2 2 $ &\QFO\ &RPSDQ\ $UWLFDG DQG .%% &RQQHFW UHDG\
- PP IXOO\ ULJLG FDELQHW
- 3UHPLHU 'UDZHU %R[DV VWDQGDUG ZLWK D ORDG FDSDFLW\ RI NJ
- UDQJHV DQG IURQWDOV WR FKRRVH IURP
- VXSHU SULFHG PP 0)& VODEV
- 2XU QHZ 9LFLQR QHDU KDQGOHHVV FROOHFWLRQ DYDLODEOH LQ DOO R
- &RORXU RU IURQWDO PDWFKHG JDEOHV DYDLODEOH QR QHHG IRU H[SHQ
- :RUNWRSV DYDLODEOH LQ PP PP PP PP OHQJWKV
- 3UHPLHU 3OXV 'UDZHU %R[ZLWK VRIW FORVH DQG FOLS RQ VRIW FORVH
-)URQWDO PDWFKHG RU FRORXU PDWFKHG SODQW RQ SDQHO RSWLRQ 'HV DOO RWKHU UDQJHV IURQWDO PDWFKHG

:+< 385,7< 3257)2/,2"

- 3XULW\ 3RUWIROLR EURFKXUH DQG SULFH OLVW DYDLODEOH
- 3XULW\ 3RUWIROLR SURGXFW PDQXDO DYDLODEOH
- 5LJLG NLWFKHQ GHOLYHU\ ² RUGHU :HHN IRU GHOLYHU\ :HHN
- <RXU DFWXDO GD\ RI GHOLYHU\ FRQÀUPHG WKH ZHHN SULRU WR GHOLYH
- $UWLFDG DQG .%% &RQQHFW UHDG\
- 5HPHGLDO VHUYLFH RUGHU :HHN IRU GHOLYHU\ :HHN VWRFN GHSHQG
- PP IXOO\ ULJLG FDELQHW
- 3UHPLHU 'HOX[H 'UDZHU %R[VRIW FORVH DQG DOO GRRUV VRIW FORVH
- 3UHPLHU 3OXV 'UDZHU %R[ZLWK VRIW FORVH HFRQRP\ RSWLRQ
- UDQJHV DQG FRORXUV DYDLODEOH
- 2XU /RQGRQ /LQHDU WUXH KDQGOHHVV FROOHFWLRQ DYDLODEOH LQ DO
- :RUNWRSV DYDLODEOH LQ PP ZLWK PP WLJKW UDGLXV RU PP DQG PP
-)URQWDO PDWFKHG SODQW RQ SDQHOV DV VWDQGDUG

'XH WR WKHLU ZHLJKW DQG KHLJKW WKH IROORZLQJ XQLWV DUH VXSSOLHG UHDG\ WR DVVHPEOH WR DOORZ HDVLHU DFF
2XU ¶2UGHU :HHN IRU GHOLYHU\ :HHN VHUYLFH LV EDVHG RQ \RX SODFLQJ \RXU RUGHU IRU OHVV WKDQ NLWFKHQV
:RUNWRSV FDQ RQO\ EH RUGHUHG IRU GHOLYHULHV RQ 5,&+021')/((7 SRVWFRGHV ZRUNWRSV DUH QRW DYDLODEOH RQ 3
2XU 3* 3* 3* SDLQWHG SURGXFW DYDLODEOH RQ D VOLJKWO\ H[WHQGHG OHDG WLPH 2UGHU :HHN IRU GHOLYHU\ :H
2XU 'RZQ\ UDQJH ZLOO FRPH ZLWK FRORXU PDWFKHG SODQW RQ SDQHOV QRW IURQWDO PDWFKHG

<285 &217$&76

6$/(6 2)),&(

2XU 6DOHV 2IÀFH LV KHUH WR KHOS \RX :H DPHQGPHQWV 6KRXOG \RX KDYH D WHFKQL 2IÀFH ZKR ZLOO GLUHFW \RXU HQTXLU\ DV D DPHQGV PXVW EH VXEPLWWHG E\ HPDLO

7HOHSKRQH

2UGHU SODFHPHQW DQG RUGHU LQIRUPDWL

;SUHVV 2UGHUV [SUHVV#ULFKPRQG IXUQLWX

3RUWIROLR &RUSRUDWH &RQWUDFWV #ULFKPRQG IXUQLWXUH FR

7HFKQLFDO DQG JHQHUDO TXHULHV

(PDLO &XVWRPHU VHUYLFH#ULFKPRQG IXUQLWX

'(6,*16 (67,0$7(6

,Q WKH HYHQW \RX QHHG WR GLVFXVV \RXU HVWLPDWLQJ WHDP

7HOHSKRQH

(PDLO &RVWLPDWLQJ#ULFKPRQG IXUQLWXUH FR

&5('7 &21752/

,I \RX KDYH D FUHGLW DFFRXQW SOHDVH X SD\PHQWV DFFRXQW TXHULHV RU DFFRXQW

$OO DFFRXQW TXHULHV

7HOHSKRQH

(PDLO &UHGLW DGPLQ#ULFKPRQG IXUQLWXUH F

5,&+021')851,785(/,0,7('

&RPSDQ\ 1XPEHU

9$7 1XPEHU

6KRZURRP &RUSRUDWH &RQWUDFWV +DGÀHOG ,Q :DWHUVLGH +DGÀHOG *ORVVRS 6. %6

$&&&2817 0$1$*(5

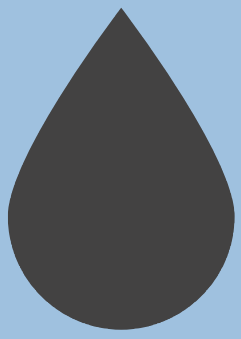

1LDPK)ODQDJD

QLDPK ÁDQDJDQ#ULFKPRQ

1RUULH 0DF/HR

QRUULH PDFOHRG#ULFKPR

285 '(6,*1 (67,0$7,1* 683325

<RXU 3XULW\ FDWDORJXHV DUH UHDG\ WR XVH RQ WKHVH WKUHH JUHDW SO

285 &7/2*8(6 $5(35(/2$'(' 21

$57,&$'

- 7KH VRIWZDUH ZH XVH WR GHVLJQ \RXU NLWF
- +HOSV WR ZLQ VDOHV DQG PDQDJH LQVWDOO
- 'HOLYHU DQ H[FHSWLRQDO FXVWRPHU H[SHUL
- ,PSURYHPHQWV PDGH EDVHG RQ FXVWRPHU IH
- 6SHHG\ DQG ÁH[LEOH VRIWZDUH
- &UHDWH YLVXDOO\ VWXQQLQJ DQG DFFXUDWH LQ MXVW D IHZ PLQXWHV

.%% &211(&7

- :RUN IDVWHU DQG VPDUWHU
- 2QOLQH TXRWLQJ RUGHULQJ DQG SURMHFW P GDWD GLUHFW IURP .%% VXSSOLHUV
- 1HZ WRROV SURYLGH HQKDQFHG IXQFWLRQDO JRRG PDQDJHPHQW UHPHGLDO WUDFNLQJ DQ
- 5XQ \RXU EXVLQHVV HYHQ PRUH SURÀWDEO\

2 2 $ &<1&/< &203$1<

- %ULQJ LGHDV WR OLIH LQVSLUH LQQRYDWLR
- (QG WR HQG VRIWZDUH VROXWLRQV WKDW KH
- &\QFRO &RXOXWLRQV VHUYH RYHU FXVWRPHU FRPPXQLFDWLRQ UHGXFH HUURUV JURZ VDO

/HW XV WDNH WKH VWUDLQ IRU \RX ZLWK VRPH JUHDW IUHH VHUYLFHV

- 'HVLJQ DQG HVWLPDWH RQ H[FHOOHQW ÀUW RUGHUV ZH ZLOO KDSSLO\ F SURFHVVLQJ WKH RUGHU :H ZLOO MXVW QHHG DQ H[WUD KRXUV WR D
- 'HVLJQ DQG HVWLPDWH RXU SURMHFW LV SORWV RU PRUH ZH ZLOO EH KDS ,I \RX ZLVK WR XVH WKLV VHUYLFH SOHDVH ÀOO RXW RXU 4XRWDWLRQ IRU FRPSOHWLRQ

285 1(: 25'(5 352&(66

1RZ WR WKH H[FLWLQJ SDUW ² WKH SODFLQJ RI \RXU RUGHU IRU \RX

%\ .%% &RQQHF
,W V DOO VR VLPSOH IDPLOLDU ZLWK WKH S WR RUJDQLVH DQ LQ

%\ ,QYHQWRU\ /
<RX SURYLGH WKH G UHTXLUHPHQWV DQG \RXU RUGHU

%\ 2UGHULQJ
IURP D GHVLJQ DQG H SDFNDJH SURYLGHG 3XULW\ E\ 5LFKPRQG)X

<RX FDQ ÀQG GHWDLOV RI DOO DYDLODEOH XQLWV RQ 3XULW\ ;SUHV 5(0(0%(5 ZH RQO\ RIIHU WKLV VHUYLFH IRU SURMHFWV SO

:+$7 :(1((' <28 72 '2)25 86

$OO RUGHUV VKRXOG EH VHQW WR RXU 2UGHUV 7HDP E\ HPDLO

- 3XULW\ ;SUHV &XUWDLQ &DOO &DOO &DOO

285 &21),50$7,21 352&('85(

385,7< ;35(66

:LWK RXU JXDUDQWHHG SRVWFRGH GHOLYHU\ GD\ \RX ZLOO DOUHDG
:LWKLQ KRXUV RXU 2UGHUV 7HDP ZLOO SURYLGH FRQÀUPDWLRQ F

385,7< 3257)2/,2

2XU VWDQGDUG OHDG WLPH RQ RXU 3XULW\ 3RUWIROLR LV RUGHU :H
NHHS \RX LQIRUPHG RI SURJUHVV ZHHNO\ ZLWK RXU QHZ GHOLYHU\
VFKHGXOH 2XU 3* 3* 3* SDLQWHG SURGXFW RQ RXU RUGHU :HH

:((.

:((.

:((.

(DFK ZHHN RXU FXVWRPHUV UHFHLYH DQ DXWRPDWHG GHOLYHU\ VFK

:HHN 'HOLYHU\ 6FKHGXOHV

$W $&7,21 5(4,5('LW LV QR ORQJ
:HHN VFKHGXOHG RUGHUV 7KHVH DUH QRZ
DFFHSWDQFH RI WKH VFKHGXOHG GHOLYHU\
GD\ RI GHOLYHU\

:HHN 'HOLYHU\ 6FKHGXOHV

:H &&7,21 5(4,5('L'O FRQÀUPDWLRQ
ZHHN FRPPHQFLQJ GDWH FRQÀUPHG ,I ZH GH
SP RQ WKH 7KXUVGD\ RI WKH ZHHN WKH GH

:HHN 'HOLYHU\ 6FKHGXOHV

1H &&7,21 5(4,5('L'UH \RX WR FRQ
WKLV WLPH 7KLV VFKHGXOH LV VLPSO\ WR P
GHOLYHULHV EH\RQG WKH :HHN DQG :HHN

285 35,&( ),/(6

2XU WZR SULFH ÀOHV DUH DYDLODEOH WR GRZQORDG DW \RXU FRQY

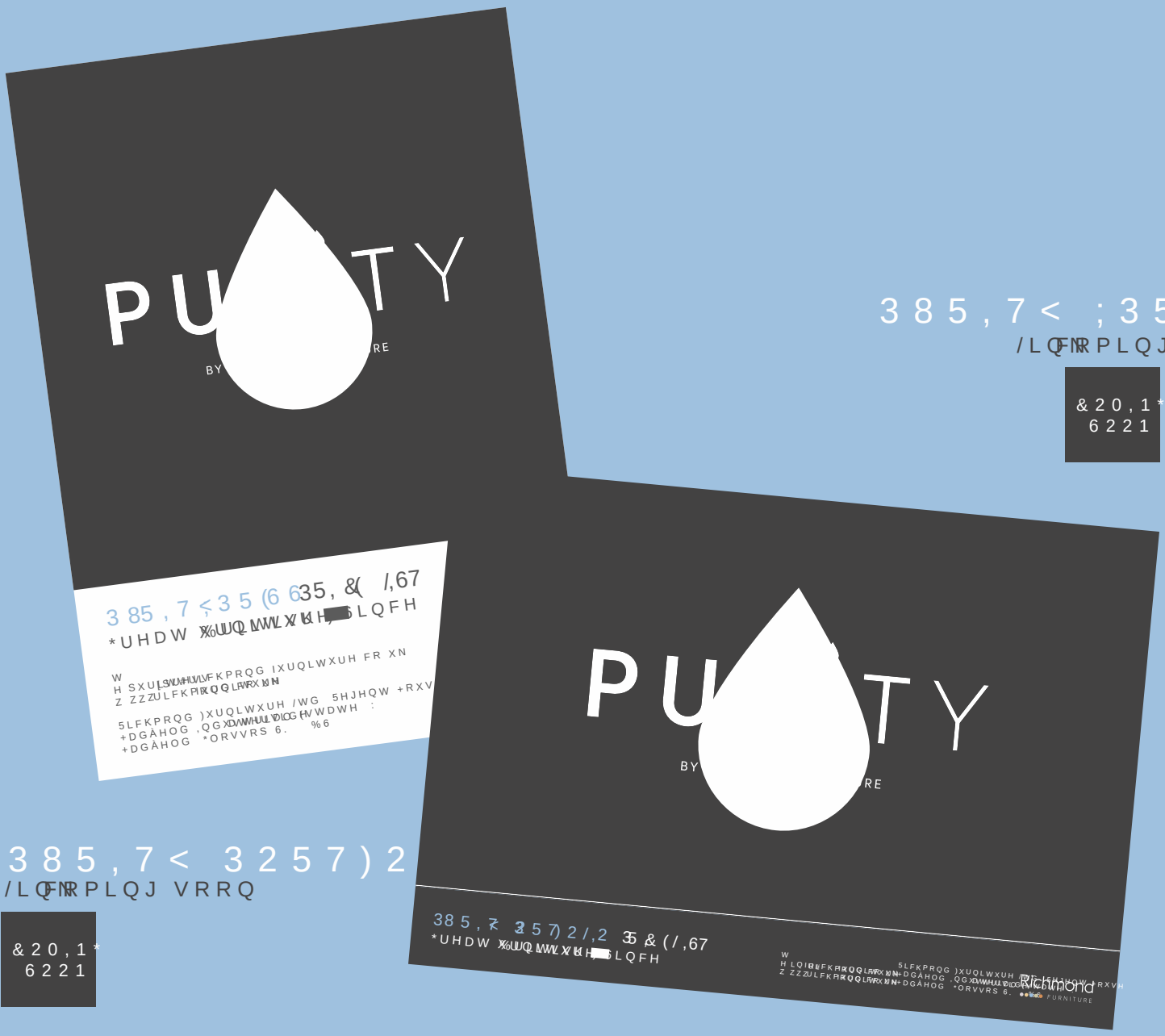

385,7<

285 6$03/(6

3ULFHV VKRZQ GR QI

:H VHOO JUHDW SURGXFWV DQG XQGHUVWDQG WKH LPSRUWDQFH RI PDNLQ
7KLV LV ZK\ ZH RIIHU VXFK D ZLGH YDULHW\ RI VDPSOH RSWLRQV \RX DUH

;35(66 6$03/(',63/$<

6L]H : PP [+ PP ['

,QFOXGHV VSDFHV
GRRUV H[FOXGH PP [PP 6'
KDQGOH VDPSOH ERDUG RI
PP [PP ZRUNWRSV IU
PP [PP

6$

… LQF GRRUV

3257)2/,2 ',63/$< 02'8

6L]H : PP [+ PP ['

,QFOXGHV VSDFHV
6' KDQGOH VDPSOH
DQGOHV VDPSOH GUDZHUVPP 6'
ZRUNWRSV IURP 3* 3*
PP [PP

6$

… LQF GRRUV

',63/$< 02'8/(

6L]H : PP [+ PP ['

,QFOXGHV VSDFHV
PP [PP 6'
KDQGOH VDPSOH ER
PP [PP

6$

… LQF GRRUV

72 3,(&(6:$7&+ %2

6L]H : PP [+ PP

6LQJOH RU GRXEOH VL IV
PP [PP 6'
0D[VDPSOHV SHU E

6$

…

6$03/('2256

6L]H : PP [+ PP

$YDLODEOH LQ DOO UD WHG
372 DQG UHTXLUH 372 HG
'RRUV DYDLODEOH RQ WL
EDU 372 ZKLFK LV Z

6'

…

:25.723 6$03/(6

3* ODPLQDWH VZDWFK V

$YDLODEOH RQ KRXU

6:73* %6

)2&

/$5*(+$1'/(%2$5'

6L]H : PP [+ PP
ZLWK PP SLWFK ORFDW HV

+DQGOHV RUGHUHG VH
DSSUR[KDQGOHV

6' ; +

…

0,1,&$%

6L]H : PP [+ PP ['

,QFOXGHV 6HUHLHV_ +5((3U 'UDZHUC
LQ 2Q\[PP 0)& &DUFDVV
+ PP 3UHPLHU 'HOX[H 7R
' PP DQG PP [PP E

6$

…

285 $)7(5 6$/(6 6833257

5(&29(5<

- :KHQ VRPHWKLQJ JRHV ZURQJ ZH NQRZ \RX QHHG XV
- (PDLO XV DW &XVWRPHU &DUH#ULFRSRQH&ODXG&RP &DOO XV RQ &&&&

9 , & , 1 2

285 1(: &21&(37

5$,/ 6<67(0

5$,/ 6<67(0
,1 $17+5$&,

6,/9(5
+$1'/(

$17+5$&,7(
+$1'/(

35(0,(5 3/86 '5$:(5 6<67(

7+(1(: 1($5
+$1'/((66 62/87,21

9LFLQR ZRUNV RQ WKH VDPH G
YHU\ VXFFHVVIXO 7UXH +DQGO
ZLWK RQH LPSRUWDQW GLIIHU
+$1'/(6 RQ DOO 7DOO +RXVLQJ

- 2Q WKH 8QLWHG VWDWHV WKH EI
XQLW WR DOORZ \RX WR RS
RI D KDQGOH
- 2Q WKH &RQWLQHQW RXU
V\VWHP LQ 6LOYHU RU $QW
RSHQ ZLWKRXW WKH XVH RI
- 2Q WKH +RXVLQJ &RQWLQXXG
XOWUD ORZ SURÀOH ,Q /LQI
RU $QWKUDFLWH

5LFKPRQG)XUQLWXUH OHDGI
IXWXUH SURRI IXUQLWXUH IRU

- $ YHU\ FRVW HIIHFWLYH QH
- 9LFLQR LV DYDLODEOH LQ D
DQG FRORXUV
- UDQJHV DQG FRORXUV
-)HDWXULQJ RXU QHZ 2Q\[F
- 8QOLNH 7UXH +DQGOHOHVV
PXOWLSOH GHVLJQV 9LFLQ
VWDQGDUG NLWFKHQ SODQ
KDQGOHV

285 %52&+85(6

$OO JUHDW NLWFKHQV QHHG JUHDW EURFKXUHV DQG RXUV GR QRW
FROOHFWLRQV RI LPSUHVVLYH NLWFKHQV 7UDQVIRUP \RXU NLWFKH

385,7< ;35(6&2//(&7,21

/LQNLQ\XUO FRP SXUL

PURITY

BY RICHMOND FURNITURE

385,7< 3257)2/,2

/LQNLQ\XUO FRP SXULW\SRUWIROLR

385,7<

BY RICHMOND FURNITURE

,1752'8&7,21 72 385,7< ;35(66

3 8 5 , 7 < ; 3 5 (6 6 ' 2 2 5 & 2 / / (& 7 , 2 1

7KH TXDOLW\ NLWFKHQ DW DQ XQEHDWDEOH SULFH DOO RQ RXU JX
:KHQ \RX QHHG D TXLFN VROXWLRQ 3XULW\ ;SUHVV LV WKH RQH WR

PG1

ADEN

BARDOLINO OAK FM
18mm slab

ARAGON OAK FM
18mm slab

RIVERSIDE OAK FM
18mm slab

AUCKLAND

PORCELAIN FM
18mm slab

DOVE FM
18mm slab

CASHMERE FM
18mm slab

PG2

BLAINE

TAUPE FM
18mm slab

DOVE FM
18mm slab

DUST FM
18mm slab

ONYX FM
18mm slab

INDIGO FM
18mm slab

FIR FM
18mm slab

3 *

& $, 5 2

*/266 &5($0 PP VODE FM

GLOSS WHITE FM
18mm slab

PG4

DESE

GLOSS WHITE CM
18mm slab

GLOSS DOVE CM
18mm slab

GLOSS DUST CM
18mm slab

DOWNEY

WHITE GREY CM
18mm shaker

TAUPE CM
18mm shaker

DOVE CM
18mm shaker

DUST CM
18mm shaker

DUNEDIN

SILK DOVE CM
18mm shaker

SILK REED CM
18mm shaker

PG5

EDINA

SILK TAUPE FM
18mm slab

SILK ONYX FM
18mm slab

SILK REED FM
18mm slab

ELLORE

GLOSS WHITE FM
18mm slab

GLOSS DOVE FM
18mm slab

GLOSS DUST FM
18mm slab

PG6

FARNBOROUGH

FIR CM
22mm shaker

INDIGO CM
22mm shaker

DOVE CM
22mm shaker

DUST CM
22mm shaker

PG7

GENEVE

SILK WHITE CM
22mm j pull slab

SILK DOVE CM
22mm j pull slab

SILK DUST CM
22mm j pull slab

SILK INDIGO CM
22mm j pull slab

<RXU 3XULW\ ;SUHVV XQLWV FRPH DV VWDQGDUG ZLWK :KLWH RU 2Q\[FDEL
FRXUVH DGG RXU)URQWDO 0DWFKHG RU &RORXU 0DWFKHG JDEOH HQGV V
GRRU $OWHUQDWLYHO\ \RX FDQ RUGHU RXU)URQWDO 0DWFKHG RU &ROR
DUH RIIHUHG ZLWK)URQWDO 0DWFKHG RU &RORXU 0DWFKHG JDEOHV DQG

) 0

)5217$/ 0$7&+:(KHQ ZH XVH WKH WHUP &2/2XU &+(KHQ ZH XVH WKH WH
0DWFKHG JDEOHV RU SODQW RQ &0 QHDUFKLGLVJDESOHVRU SWKDQWWRQH
JDEOHV VLGHV RI \RXU XQLWV RU SODEOH RQVLGHV RI \RXUF XQLWW
WR WKH YLVLEOH VLGHV RI WKH XQLWW WKOYEHLEDQXVLGHX XUHGWKUH
WKH VDPH PDWHULDOV DV WKH NLWFKUHQ GRRU VDPHPDWHULDOV DV W
PDWFK &RXU SOLQWK DQG ÀOOHUV ZLOOEDOWRXH PDWDOOOOWRXH
FKLSERDUG WKDW PDWFKHV WKH
ÀQLVK RI WKH GRRU &RXU SOLQW
0DWFKHG &RQVXOW 5LFKPRQG IRU
DSSURYH

385,7< ;35(66 &$%,1(7 &2//(&

2XU 6(5,(6_ :2 DELQHW GHVLJQ RIIHUV D FRQWHPSRUDU\ NLWFKHQ VROXWLRQ WR VXLW (W5 UR EXDW GHVLJQ UXOHV D KLJK OHYHO RI TXDOLW\ ZLWK WKH RSSRUWXQLW\ IRU \RX WR FXV KLQJHV DQG GUDZHUV WR VXLW \RXU QHHGV

&$%,1(7 &2/256 9,/$%/(

:+,7(

21<;

6(5,(6:2 $6 67$1'$5'

-)XOO\ 5LJLG PP 0)& &DELQHW
- :KLWH RU 2Q\[,QWHULRU &DELQHW
- PP 'HHS %DVH 8QLWV
- PP +LJK %DVH 8QLWV ([FOXGHV :RUNWRS
- PP +DUGERDUG %DFN 3DQHO
- PP 'HHS :DOO 8QLWV
- :DOO +DQJLQJ %UDFNHW :D\ $GMXVWDEOH
- R &OLS 2Q +LQJH ZLWK $WWDFKPHQW WR &RYHUW +LQJH WR 6R &OVH
- 3UHPLHU 'UDZHU %R[LQ :KLWH ZLWK 'UDZHU %UDNH 6\VWHP WR &RQYHUW WR 6RIW &OVH
- 6HUYLFH *DS PP RQ %DVH 8QLWV
- 6HUYLFH *DS PP RQ :DOO 8QLWV
-)UQWDO 0DWFKHG &RUQHU 6RXWLRQ

237,216

- 3UHPLHU 3OXV 6RIW &OVH 'UDZHU LQ $WKUDFLWH

35(0,(5 '5$:(5 6<67(0 9,/$%/(

:+,7(

35(0,(5 3/86 '5$:(5 6<67(0 9,/$%/(

$17+5$&

3 8 5 , 7 < ; 3 5 (6 6 6 8 5) $ & (& 2 / / (&

$ FROOHFWLRQ RI KLJK SUHVVXUH ODPLQDWH VXUIDFHV HQJLQHHUH

% $ 1 : (/ /
& / 2 8 '

3 *
7 + (3 5 (0 , (5
' (/ 8 ; (
& 2 / / (& 7 , 2 1

7KLQJV MXVW JRW D OLW
ZLWK RXU UHFHQWO\ ODX
H[RWLF VWRQHV PDUEOH
ODPLQDWHV 6XUIDFHV D
D PP UDGLXV 8SVWDQG
VTXDUH HGJH

% ($ 8 / <
7 5 (9 , 6 2

% ($ 8 / <
& $ / & 8 7 7 $

385,7< ;35(66 +$1'/(&2//(&7,

7KH SHUIHFW NLWFKHQ QHHGV WKH SHUIHFW KDQGOH :H RIIHU DQ H[WHQVLYH UDQJH
EHVW VXLWV \RX DQG \RXU NLWFKHQ :KHWKHU DQ XOWUD PRGHUQ ÀQLVK RU VRPHWH

7 %$5
%DU +DQGOH %UXVK
+DQGOH &HQWUHV
+

38//
3XOO +DQGOH &KURI
+DQGOH &HQWUHV
+

'
' +DQGOH &RSSHU
+DQGOH &HQWUHV PP
+

.12%
-XGH .QRE +DQGOH %UXVKHG %UDVV
+DQGOH &HQWUHV PP
+

.12%
-XGH .QRE +DQGOH 3RLVKHG 1LFNHO
+DQGOH &HQWUHV PP
+

.12%
-XGH .QRE +DQGOH $QWLTXH &RSSHU
+DQGOH &HQWUHV PP
+

7$3(5
7DSHU +DQGOH 6DWI
+DQGOH &HQWUHV
+

7$3(5
7DSHU +DQGOH &KUF
+DQGOH &HQWUHV
+

%2:
%RZ +DQGOH %UXVK
+DQGOH &HQWUHV
+

%2:
%DU +DQGOH 3RLVI
+DQGOH &HQWUHV
+

38//
7DUYRV 3XOO +DQG
+DQGOH &HQWUHV
+

38//
5KHD 3XOO +DQGOH %ODFN
+DQGOH &HQWUHV PP
+

.12%
'HOD .QRE %UXVKH
+DQGOH &HQWUHV
+

.12%
'HOD .QRE %UXVKH
+DQGOH &HQWUHV
+

.12%
'HOD .QRE $QWLTXI
+DQGOH &HQWUHV
+

&83
'HOD &XS +DQGOH
+DQGOH &HQWUHV
+

&83
'HOD +DQGOH 3RLVKHG 1LFNHO PP
+DQGOH &HQWUHV PP
+

&83
HHOD +DQGOH $QWL
+DQGOH &HQWUHV
+

&83
-XGH &XS +DQGOH %
+DQGOH &HQWUHV
+

&83
-XGH +DQGOH 3RLVKHG 1LFNHO
+DQGOH &HQWUHV PP
+

&83
-XGH +DQGOH $QWL
+DQGOH &HQWUHV
+

&859(
$XRÀOH +DQGOH 6WDLQOH
$YDLODEOH PP PP
+DQGOH &HQWUHV PP
+ +

&859(
3XRÀOH +DQGOH %ODF
$YDLODEOH PP PP
+DQGOH &HQWUHV PP
+ +

&859(
1RPD 3URÀOH 6WDL
+DQGOH &HQWUHV
+

38//
3HPEUOGJH ' +DQGOH &KURPH
+DQGOH &HQWUHV PP
+

38//
3HPEUOGJH ' 3RLVK
+DQGOH &HQWUHV
+

%$5
*UDI %DU %ODFN
+DQGOH &HQWUHV
+

%$5
*UDI %DU 'DUN %U
+DQGOH &HQWUHV
+

38//
8 3XOO %ODFN
+DQGOH &HQWUHV
+

38//
8 3XOO 3RLVKHG &
+DQGOH &HQWUHV
+

38//
8 3XOO %UXVKHG %
+DQGOH &HQWUHV
+

38//
8 3XOO %UXVKHG &R
+DQGOH &HQWUHV
+

&83
&RFKGDOH &XS 6DWI
+DQGOH &HQWUHV
+

38//
5RFKGDOH 3XOO 6DWLQ
+DQGOH &HQWUHV P
+

.12%
&RFKGDOH .QRE 6DWLQ
+DQGOH &HQWUHV PP
+

.12%
2EHUQ .QRE *ROGHQ &
+DQGOH &HQWUHV PP
+

.12%
2EHUQ .QRE 3RLVKHG
+DQGOH &HQWUHV PP
+

&83
6PRRWK &XS &DVW ,UQ
+DQGOH &HQWUHV P
+

%2:
6PRRWK %RZ &DVW ,UQ
+DQGOH &HQWUHV P
+

.12%
6PRRWK .QRE &DVW ,UR
+DQGOH &HQWUHV PP
+

&83
0D\EHUU\ .QRE 3RLVKH
+DQGOH &HQWUHV P
+

.12%
0D\EHUU\ .QRE 3RLVKH
+DQGOH &HQWUHV PP
+

%2:
)DELDQ %RZ 3HZWHU
+DQGOH &HQWUHV P
+

%$5
&KHOVHD %DU 6WDLQOH
+DQGOH &HQWUHV P
+

%$5
%RVWRQ %DU 6WDLQOH
+DQGOH &HQWUHV P
+

%2:
&RUGHOD %RZ 3RLVK
+DQGOH &HQWUHV P
+

38//
/LQFROQ ' 3RLVKHG &K
+DQGOH &HQWUHV P
+

38//
/LQFROQ ' 6WDLQOHVV 6
+DQGOH &HQWUHV P
+

%2:
/HZLV %RZ 6WDLQOHVV
+DQGOH &HQWUHV P
+

385,7< ;35(66 5$1*(&217(17

$// 81,76 6+2:1 385,7< ;35(66 $5( )520 285,(6_ :2 5$1*(

([WUD 7DOO 8QLW 7DOO 8QLW :DOO 8QLW %UGJLQJ 8QLWV %DVH 8QLW %RLOHU 8QLW

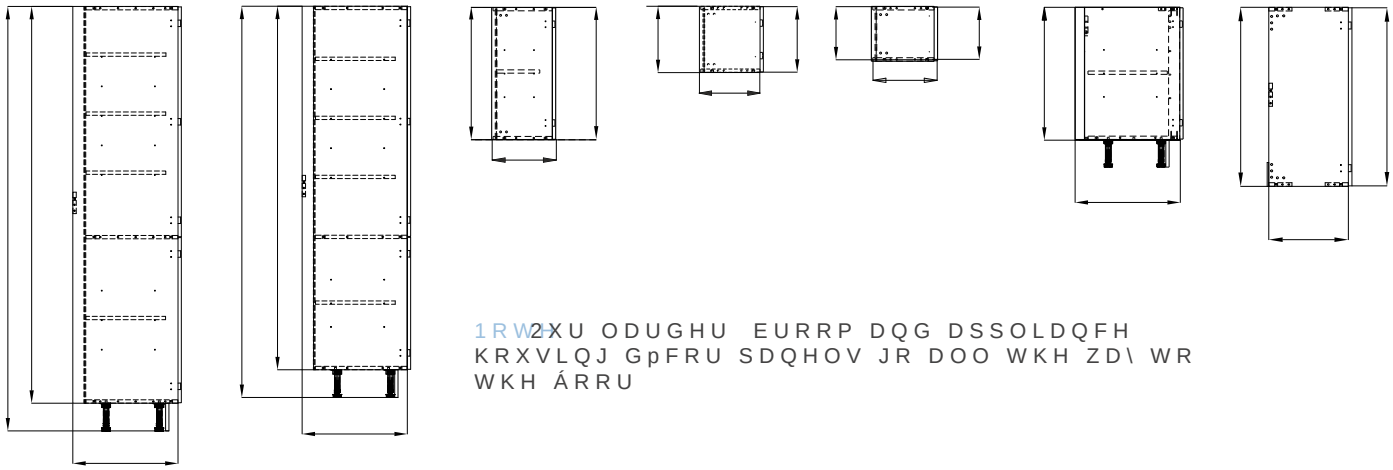

1RW2XU ODUGHU EURRP DQG DSSOLDQFH KRXVLQJ GpFRU SDQHOV JR DOO WKH ZD\ WR WKH ÁRRU

&RUQHU %DVH 8QLW 3ODQQLQJ &RUQHU %DVH 8QLW 3ODQQLQJ $:

/+ 6KRZQ 5+ LQ 2SSRVLWH +D

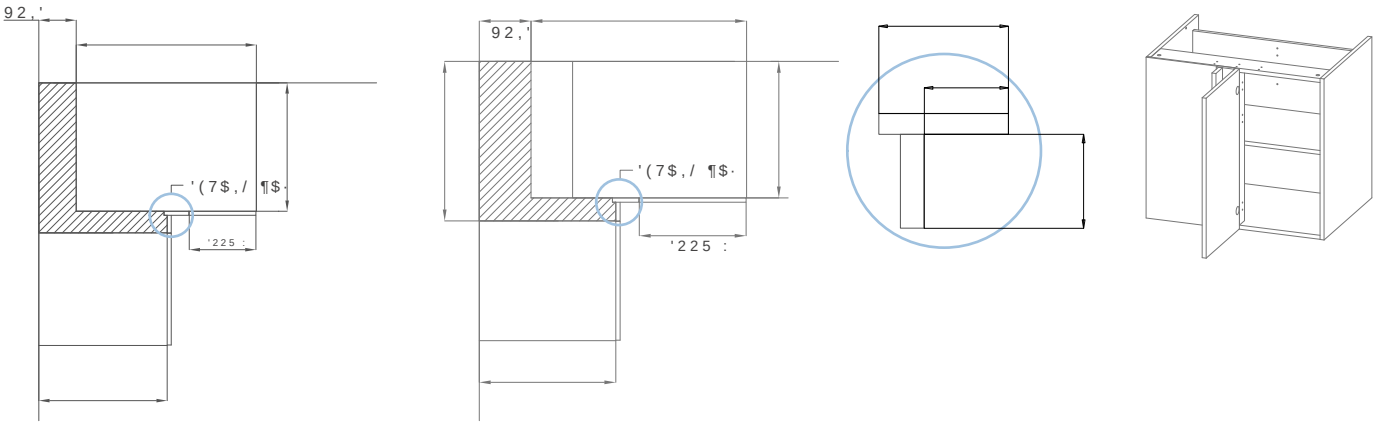

+LJKOLQH 8QLWV
+/&% : 'RRU 9RLG PP
+/&% : 'RRU 9RLG PP
+/&% : 'RRU 9RLG PP

'UDZHUOLQH 8QLWV
'/&% : 'RRU 9RLG PP

+LJKOLQH 8QLWV
+/&% : 'RRU 9RLG PP
+/&% : 'RRU 9RLG PP

&RUQHU %DVH 8QLW 3ODQQLQJ &RUQHU %DVH 8QLW 3ODQQLQJ :

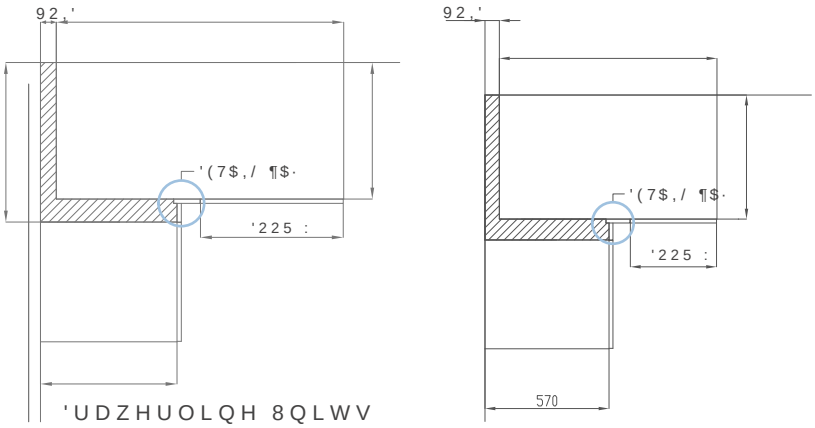

'UDZHUOLQH 8QLWV
+/&% : 'RRU 9RLG PP
'/&% : 'RRU 9RLG PP

+LJKOLQH &RUQHU 8QLWV
+/&% : 'RRU 9RLG PP
+/&% : 'RRU 9RLG PP
+/&% : 'RRU 9RLG PP

'UDZHUOLQH &RUQHU %DVH
'/&% : 'RRU 9RLG PP
'/&% : 'RRU 9RLG PP

&RUQHU :DOO 3DQQL'HWDLO $

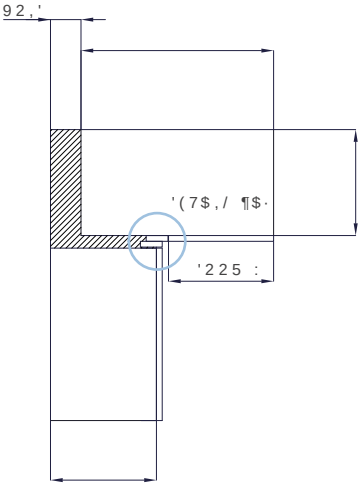

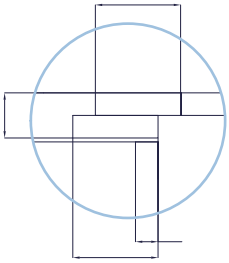

/+ 6KRZQ
5+ LQ RSSRVLWH
KDQG

+ :DOO 8QLWV
&: : 'RRU
&: : 'RRU

+ :DOO 8QLWV
&: : 'RRU PP 9RLG
&: : 'RRU PP 9RLG

+ :DOO 8QLWV
&: : 'RRU PP 9RLG
&: : 'RRU PP 9RLG

PP /DUGHUV PP /DUGHUV
3XOO 2XW 6ZLQJ &RXQWHU +RXVLQJ

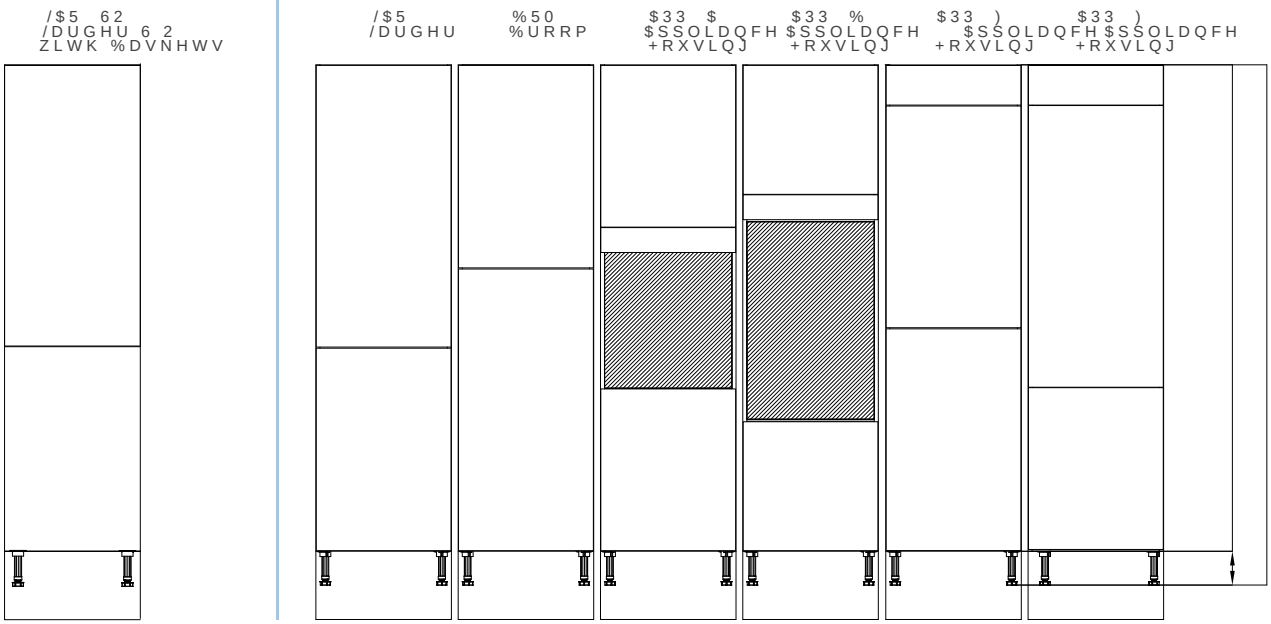

3DQWU\ /DUGHUV $SSOLDQFH +RXVLQJ
+ +

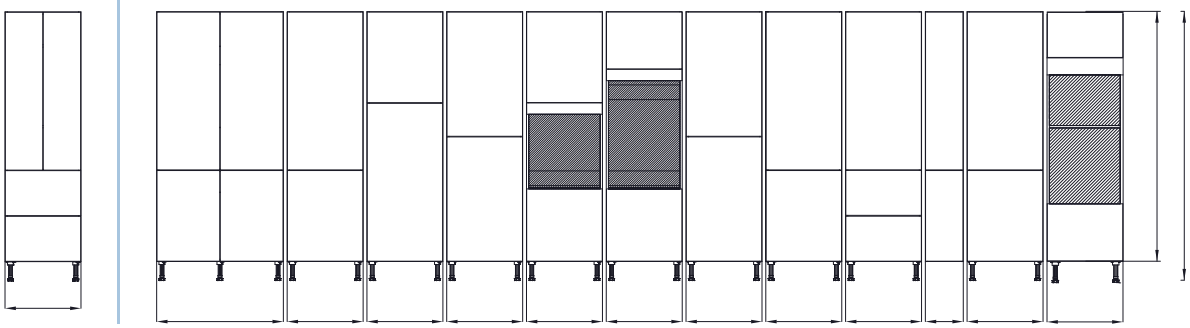

%DVH 'UDZHU :DOO 8QLWV
+

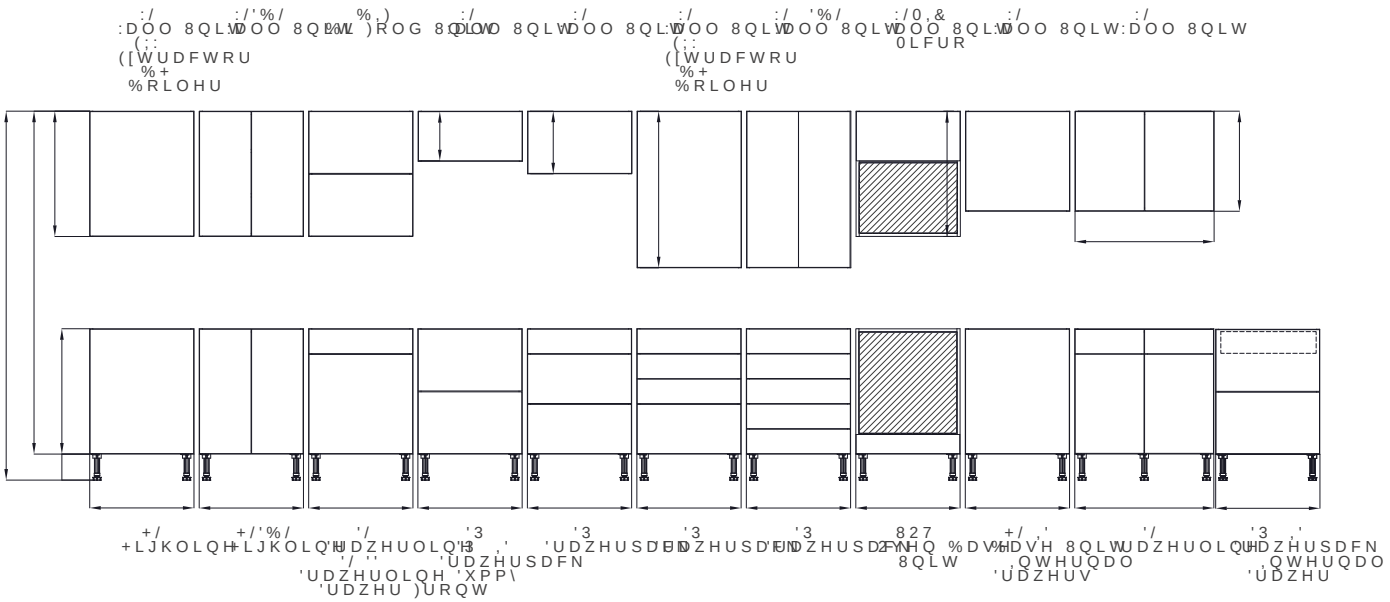
:DOO 8QLW
(;;
([WUDFWRU
%+
%RLOHU
:DOO 8QLW
:DOO 8QLW
:DOO 8QLW

385,7< 9,&,12 5$1*(&217(17

7DOO 8QLW

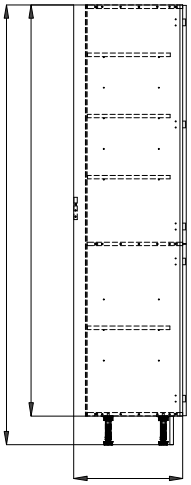

0HGLXP 8QLW/RZ 8QLW

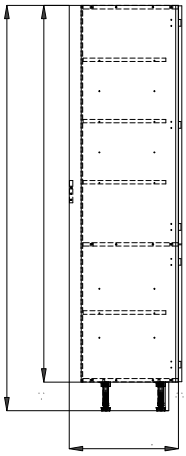

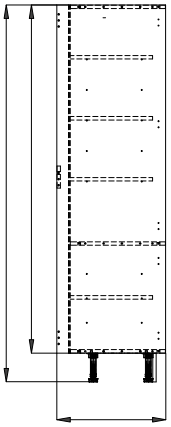

6WXGLR 8QLW7DOO 8QLWV

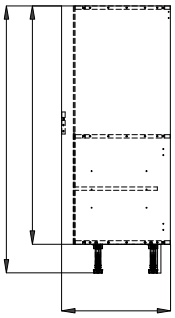

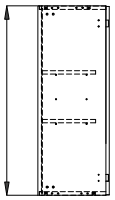

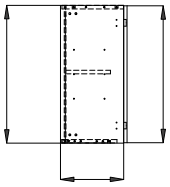

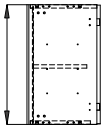

%ULGJLQJ 8QLWV %DVH 8QLW

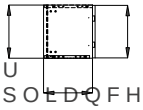

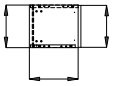

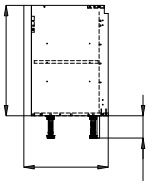

1RWH 2XU ODUGHU EURRP DQG DSSOLDQFH KRXVLQJ GpFRU SDQHOV JR DOO WKH ZD\ WR WKH ÁRRU

&RUQHU %DVH 8QLW 3OD&RQLQJ %DVH 8QLW 3OD&RQLQJ $: 5+ 8QLW /+ %OD&RQ

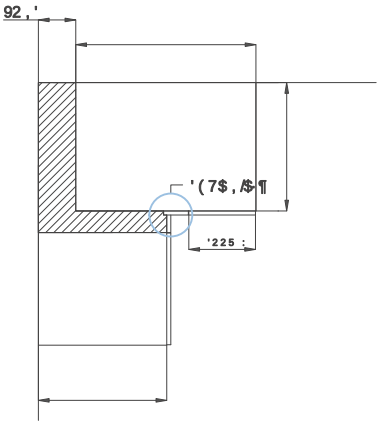

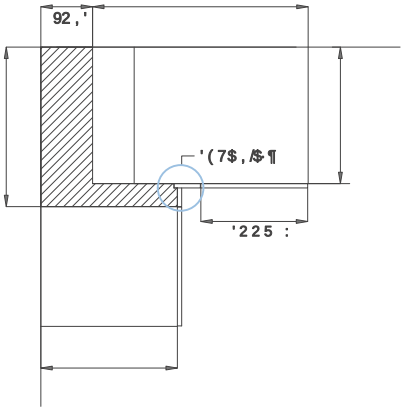

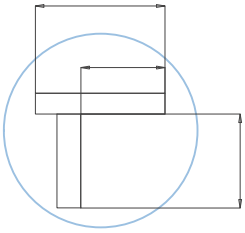

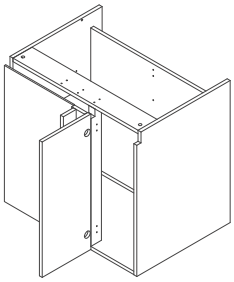

+LJKOLQH 8QLWV
+/&% : 'RRU 9RLG PP
+/&% : 'RRU 9RLG PP
+/&% : 'RRU 9RLG PP

+LJKOLQH 8QLWV
+/&% : 'RRU 9RLG PP

&RUQHU %DVH 8QLW 3OD&RQLQJ %D:VH 8QLW 3ODQQLQJ :

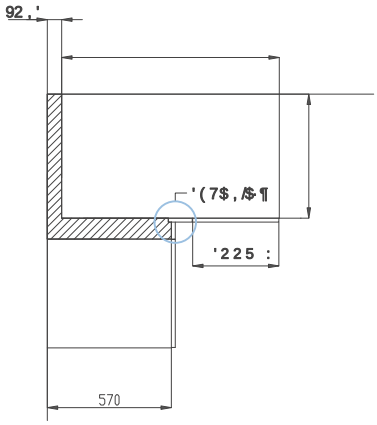

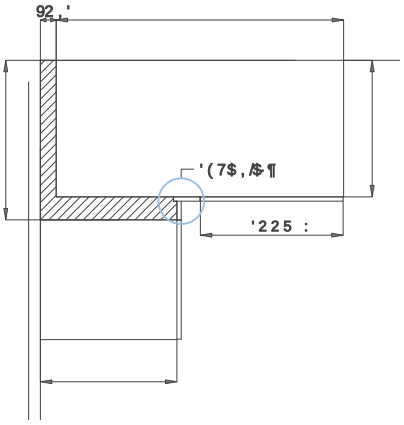

+LJKOLQH &RUQHU 8QLWV
+/&% : 'RRU 9RLG PP
+/&% : 'RRU 9RLG PP
+/&% : 'RRU 9RLG PP

+LJKOLQH &RUQHU 8QLWV
+/&% : 'RRU 9RLG PP

+LJKOLQH &RUQHU %DVH ZLWK 3XOO 2XW &DURVHO
+/&% 32 : 'RRU 9RLG PP

&RUQHU :DOO 3ODQQL'HWDLO $

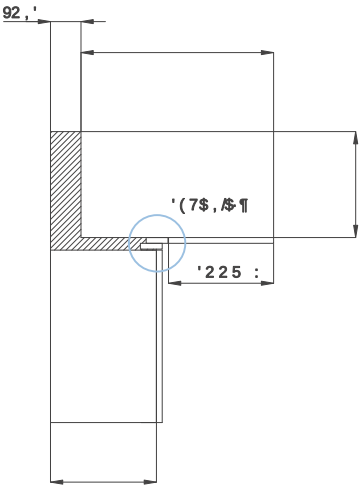

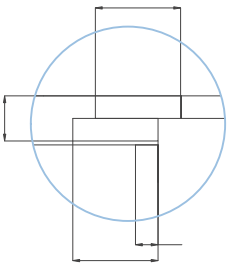

/+ 6KRZQ
5+ LQ RSSRVLWH
KDQG

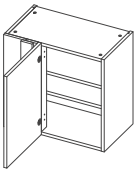

+ :DOO 8QLWV
&: : 'RRU PP 9RLG
&: : 'RRU PP 9RLG

+ :DOO 8QLWV
&: : 'RRU PP 9RLG
&: : 'RRU PP 9RLG

+ :DOO 8QLWV
&: : 'RRU PP 9RLG
&: : 'RRU PP 9RLG

/DUGHUV $SSOLDQFH +RXVLQJ
+
$SHUWXUH LV D JXLGH $OZD\V FKHFN PDQXIDFWXUHU JXLGH IRU ÀWWLQJ LQVWUXFWLRQV)L

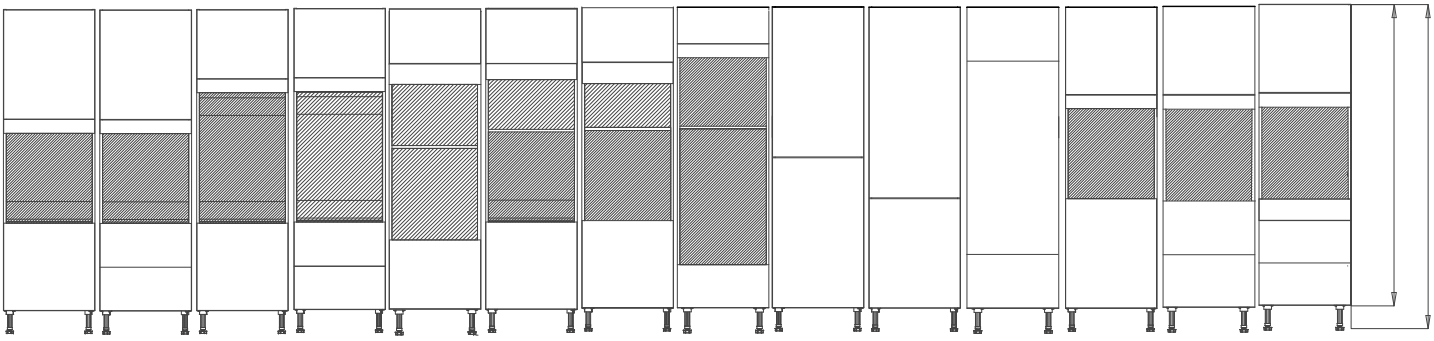
33 33 $33% $33% $33& $33& $33& $33' $33) $33) $33) $33- 33 33 33
$ 6LQJOH 6LQJOH 'RXEOH 'RXEOH &RU 0LFURZ &RU &RU &RU

/DUGHUV $SSOLDQFH +RXVLQJ +

$SHUWXUH LV D JXLGH $OZD\V FKHFN PDQXIDFWXUHU JXLGH IRU ÀWWLQJ LQVWUXFWLRQV)L

$33 $ $33 $ $33 0 $33 0 $33 0 $33 &2 $33 &2 $33 &2 $33 &2 $33 &2) $33 $ $33 &2 $33 $ $33 % $33 & $33 ' $33) $33) $33) $33 -
$ 6LQJOH &RQWURO &RQWURO &RQWURO &RPSDFW &RPSDFW &RPSDFW

/DUGHU %URRP
PP 'HHS

)LOOHUV DUH VXSSOLHV RYHUVL]HG IRU FXWWLQJ RQVLWH

%URRP %URRP /DUGHU

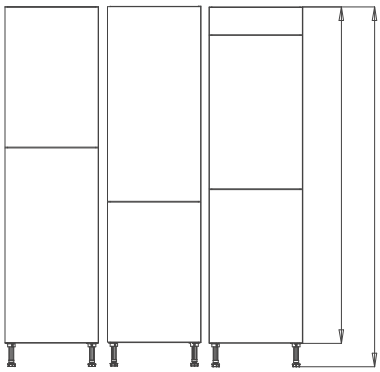

% %50 % /$5 % /$5
% %50 % /$5)LOOHU
% %50 % /$5
% %50 % /$5

/DUGHU %URRP /DUGHU

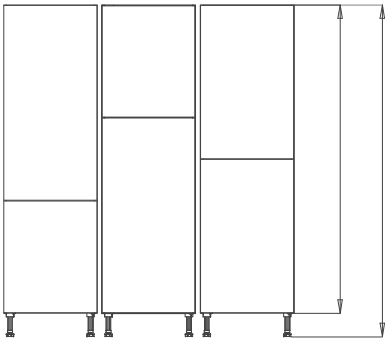

% /$5 % %50 % /$5
% /$5 % %50
% /$5 % %50
% /$5 % %50

/DUGHU %URRP $SSOLDQFH
PP 'HHS

)LOOHUV DUH VXSSOLHV RYHUVL]HG IRU FXWWLQJ RQVLWH

/DUGHU %URRP /DUGHU

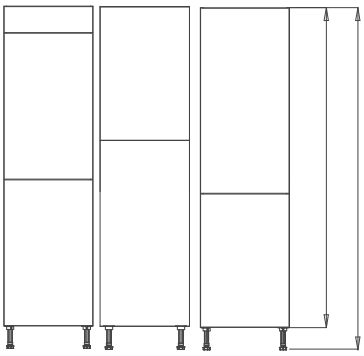

/$5 %50 /$5
%50 /$5
%50 /$5
%50 /$5
62 7
%50 /$5 62
/$5 62
32 %$6.(76
/$5 32
/$5 32

-)ULGJH 'RRU 'RRU 'RRU
/DUGHU)UHH]HU 'UDZHU /DUGHU 7DOO /DUGHU %URRP /DUGHU6ZLQJ 3XOO
3DQWU\ 2XW /DUGHU

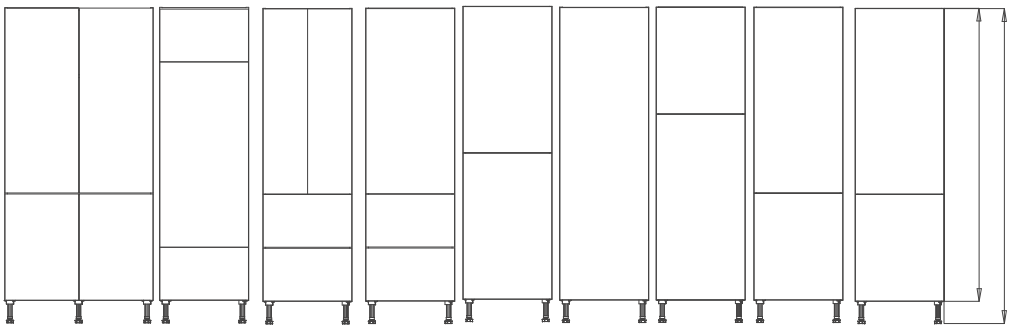

/$5 $33- 317 /$5 /$5 /$5 '5 %50 /$5 32
%50 /$5 /$532
/$5 '5 %50 /$5 /$532
%50 /$5
/$5 '5
)ULGJH)UHH]HU
$33) /$562
/$562
/$562

$ 6LQJOH %H 'RXEOH /DUGHU
2YHQ 2YHQ

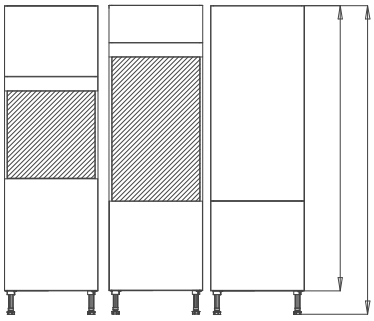

$33 $ $33 % /$5
/$5
)LOOHU)LOOHU /$5

'RXEOH 6LQJOH 0LFUR)ULGJH /DUGHU
2YHQ 2YHQ 2YHQ)UHH]HU

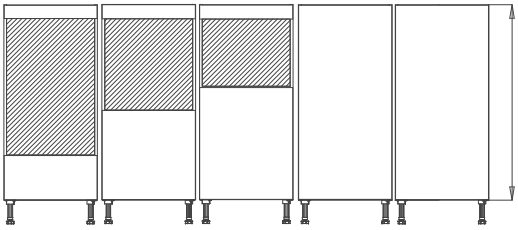

$33 % $33 $ $33 & $33) /$5
/$5
)LOOHU)LOOHU)LOOHU /$5

385,7< ;35(66 '(/,9(5< &

<285
385,7< ;35(
'(/,9(5< '$<

2XU 3XULW\ ;SUHVV FROOHFWLRQ LV RIIHUHG RQ RXU JXDUDQWHHG SRVWFRGH GHO
DW WKH SRLQW RI SODFLQJ \RXU RUGHU ,I \RX RUGHU E\ DP F \RXU
VDPH GD\ WKH IROORZLQJ ZHHN 7KH IXOO GHWDLOV RI WKH VH QÀUP
5,&+021')/((7 '(/,9(5< 3$//(7,6(' '(/,9(5<

021'$< 5,&+021')/((7 '(/,9(5<
2UGHU E\ DP 0RQGD\ :HH GHOLYHUH
&9 11 /(3(/1

78(6'$< 5,&+021')/((7 '(/,9(5<
2UGHU E\ DP 7XHVGD\ :HH GHOLYHU
2/ 0 6.

:('1(6'$< 5,&+021')/((7 '(/,9(5<
2UGHU E\ DP :HGQHVGD\ :HH GHOLYH
&$ /$ 35 :1 &: 67 7) 6<)<

7+856'$< 5,&+021')/((7 '(/,9(5<
2UGHU E\ DP 7KXUVGD\ :HH GHOLYHU
1('+ 65 '/ 76 +* <2 /6 +; +' :) '1 +
6 '(1* :6 :9 '< %

)5,'$< 5,&+021')/((7 '(/,9(5<
2UGHU E\ DP)ULGD\ :HH GHOLYHUHG
&+ :$ / %/ %% %'

021'< 3//(7,6(' '(/,9(5<
2UGHU E\ DP 0RQGD\ :HH GHOLY
6$ /' +5 :5 &) 13 */ %6 %$ '7 7$
63 %+ 32 62 *8 5* 2; 0. /8 +3 (
&7 66 &0 $/ 6* &% &2 ,3 15 :'
1 1: :& : 6: 60 &5 %5 6((& (,

7+856'< 3//(7,6(' '(/,9(5<
2UGHU E\ DP 7KXUVGD\ :HH GHO
* .$ 0/ (+ '* 7' //

,03257$17 ,1)250$7,21
3267&2'(6 $/62 9,/$%/(21 3$//(

1(;7 :((. '(/,9(5<

2XU JXDUDQWHHG SRVWFRGH GHOLYHU\ SURYLGHV WKDW SODFLQJ DQ RUGHU EHIRUH QRRQ WRGDW
DSSUHFLDWH \RX KDYH D ORW WR SODQ DURXQG RXU GHOLYHU\ ZLQGRZ &RQWDFW XV LI
GRZQ

.,7&+(1 :25.723 '(/,9(5,(6 21 1(: 25'(56

5,&+021')/((7 '(/,9(5< 3267&2'(6
- 7KHUH DUH QR UHVWULFWLRQV WR SURGXFW DYDLODEOH RQ WKLV VHUYLFH
- *RRGV DUH GHOLYHUHG IUHHIRUP ZKLFK PHDQV HDFK LWHP RIÁRDGHG LQGLYLGX
'HOLYHU\ 9HKLFOH ZKLF
KRXU FRPPLWPHQW

3$//(7,6(' '(/,9(5< 3267&2'(6
- 3DOOHWLVHG GHOLYHU\ LV DYDLODEOH RQ UHTXHVW IRU WKHVH SRVWFRGHV DW
RIÁRDG
- 7KHUH DUH UHVWULFWLRQV WR WKH SURGXFW DYDLODEOH RQ WKLV VHUYLFH :H
QRU DQ\ PDWHULDOV ORQJHU WKDQ PP
- 9LFLQR KRUL]RQWDO UDLOV ZLOO EH VXSSOLHG LQ PP OHQJWKV
- *RRGV DUH GHOLYHUHG 3DOOHWLVHG ZKLFK PHDQV WKH\ ZLOO EH GHOLYHUHG
UHTXLUH WKH XVH RI D IRUN OLIW WR RIÁRDG

3$//(7,6(' '(/,9(5< 3267&2'(6
- :H RQO\ RIIHU RXU SDOOHWLVHG GHOLYHU\ RQ WKHVH SRVWFRGHV IRUNOLIW UHT
- 1R DGGLWLRQDO FKDUJHV DSSO\
- 7KHUH DUH UHVWULFWLRQV WR WKH SURGXFW DYDLODEOH RQ WKLV VHUYLFH :H
QRU DQ\ PDWHULDOV ORQJHU WKDQ PP
- 9LFLQR KRUL]RQWDO UDLOV ZLOO EH VXSSOLHG LQ PP OHQJWKV
- *RRGV DUH GHOLYHUHG 3DOOHWLVHG ZKLFK PHDQV WKH\ ZLOO EH GHOLYHUHG
UHTXLUH WKH XVH RI D IRUN OLIW WR RIÁRDG

5(0(',$/ '(/,9(5,(6

$ GHOLYHU\ RIIHU QRW DW &HS
QHZ NLWFKHQ DUULYHV
GDPDJH :H GR DSSUHFLD
RQ RFFDVLRQV WKLQJV
SODQ 2Q WKHVH RFFDVL
WKH VSHHG RI UHFRYHU\

6PDOO LWHPV VXFK DV G
ZLOO EH E\ FDUULHU RU
'HOLYHU\ 9HKLFOH ZKLF
KRXU FRPPLWPHQW

/DUJHU LWHPV VXFK DV
EUHDNIDVW FDUV DQG W
GHOLYHUHG XVLQJ RXU
9HKLFOH RQ WKH QH[W S
GDWH ZH GR UHTXLUH
QH[W WKH 5HJLRQDO 'HO

385,7<

BY RICHMOND FURNITURE

,1752'8&7,21 72 385,7< 3257)2/,2

385,7<

3 8 5 , 7 < 3 2 5 7) 2 / , 2 ' 2 2 5 & 2 / / (& 7

/ R R N L Q J I R U \ R X U G U H D P N L W F K H Q " 7 K H Q O R R N Q R I X U W K H U $ K X J H

3 *

$ ' (1

%$5'2/,12 2$. FM PP VODE
5*21 2$. FM PP VODE
5,9(56,'(2$. FM PP VODE

$8&./$1'

325&(/$,1 FM PP VODE
'29(FM PP VODE
&$6+0(5(FM PP VODE

3 *

%/$,1(

7$83(FM PP VODE
3(%%/(FM PP VODE
'29(FM PP VODE
'867 FM PP VODE
21<; FM PP VODE
62)7 %/$&. FM PP VODE
526(FM PP VODE
5((FM PP VODE
),5 FM PP VODE
02180(17 FM PP VODE
'(1,0 FM PP VODE
,1',*2 FM PP VODE

3 *

&$/*$5<

:+,7(FM PP VODE
*5(< FM PP VODE
1$785$/ FM PP VODE
3(:7(5 FM PP VODE

&$7$1,$

&+,$52 FM PP VODE
6&852 FM PP VODE

&252

%,$1&2 FM PP VODE
0,(/(FM PP VODE
0$502 FM PP VODE
0(==21277 FM PP VODE
21<; FM PP VODE

3 *

'2:1(<

:+,7(CM PP VKDNHU
*5(< CM PP VKDNHU
7$83(CM PP VKDNHU
'29(CM PP VKDNHU
'867 CM PP VKDNHU

12%8 6,/.

*5$3+,7(FM PP VODE
'867 FM PP VODE
'29(FM PP VODE
:+,7(FM PP VODE
,1',*2 FM PP VODE

'81(

'29(FM PP VKDNHU
5((FM PP VKDNHU
&$6+0(5(FM PP VKDNHU
)-25' FM PP VKDNHU
0866(/ FM PP VKDNHU
:+,7(FM PP VKDNHU

3 *

(',1$

6,/. 7$83(FM PP VODE
6,/. 3(%%/(FM PP VODE
6,/. 21<; FM PP VODE
6,/. 5((FM PP VODE
6,/. ,1',*2 FM PP VODE
6,/. 62)7 %/$&. FM PP VODE

(//25(

*/266 :+,7(FM PP VODE
*/266 '29(FM PP VODE
*/266 '867 FM PP VODE

PG6

FARNHAM

NATURAL EARTH FM	DUST FM	DAKAR FM	CASHMERE FM	DOVE FM	MUSSEL FM	GRAPHITE FM	INDIGO FM	SLATE FM	FIR FM	WHITE FM
22mm shaker	22mm shaker	22mm shaker	22mm shaker	22mm shaker	22mm shaker	22mm shaker	22mm shaker	22mm shaker	22mm shaker	22mm shaker

NOBU GLOSS

CASHMERE FM	DUST FM	DOVE FM	WHITE FM	GRAPHITE FM
18mm slab	18mm slab	18mm slab	18mm slab	18mm slab

PG7

GENOA

SILK WHITE FM	SILK DOVE FM	SILK DUST FM	SILK INDIGO FM	GLOSS WHITE FM	GLOSS DOVE FM	GLOSS DUST FM
22mm j pull slab	22mm j pull slab	22mm j pull slab	22mm j pull slab	22mm j pull slab	22mm j pull slab	22mm j pull slab

PG8

CAPTON		CLIVEDEN		FULWOOD	SOMERTON	TATTON		WINSFORD
Light Oak shaker with v groove FM	Painted shaker with v groove FM	Light Oak raised centre panel FM	Painted raised centre panel FM	Painted narrow shaker FM	Painted narrow shaker FM	Light Oak shaker with eternal bead FM	Painted shaker with eternal bead FM	Painted inframe effect narrow shaker FM

PG9 | PG10

HAMBRIDGE	ISLA	BELLINGHAM
Painted effect shaker with internal bead FM	Painted shaker with integrated handle FM	Painted 18mm slab FM

Your Purity Portfolio units comes in either SERIES|3HREE in White, Oak or Onyx cabinets, or SERIES|4OUR in White or Onyx as standard. Your visible cabinet ends are therefore White, Oak or Onyx. You can, of course, add our Frontal Matched or Colour Matched gable ends should you wish the visible ends of your cabinet to match the kitchen door. Alternatively, you can order our Frontal Matched or Colour Matched plant on panels. The guide below confirms which of our ranges are offered with Frontal Matched or Colour Matched gables and plant on panels.

FM **FRONTAL MATCHED** When we use the term 'Frontal Matched' gables or plant on panels, this explains that the gables (sides of your units) or plant on panels (which attach to the visible sides of the units) will be manufactured from the same materials as the kitchen door, creating a 100% match. Your plinth and fillers will also be 'Frontal Matched'.

CM **COLOUR MATCHED** When we use the term 'Colour Matched' gables or plant on panels, this explains that the gables (sides of your units) or plant on panels (which attach to the visible sides of the units) will NOT be manufactured from the same materials as the kitchen door, but in a substitute material. Usually, this will be a melamine-faced chipboard that matches the colour of the fascia, but not the finish of the door. Your plinth and fillers will also be 'Colour Matched'. **Always** consult Richmond for samples to approve.

6(5,(6_ +5((
$6 67$1'$5'

&$%,1(7
&2/2856
9,/$%/(

:+,7(

2XU 6(5,(6_ +5((FDELQHW HPERGLHV WUXH OX[XU\ GHVLJQHG IRU WKH PRVW VRSKLVWLFDWHG SURMHFWV $YDLODEOH LQ WKUHH VWX LW RIIHUV WKH ÁH[LELOLW\ WR FRPSOHPHQW RU FRQWUDVW ZLWK \ NLWFKHQ VW\OH DQG SDOHWWH)HDWXULQJ WKH +HWWLFK LQWHJU 3UHPLHU 'HOX[H GUDZHU V\VWHP LQ $QWKUDFLWH WKLV FDELQHW QHZ VWDQGDUG RI HOHJDQFH DQG IXQFWLRQDOLW\

-)XOO\ 5LJLG PP 0)& &DELQHW
- :KLWH 2Q\[RU 2DN ,QWHULRU &DELQHW
- PP 'HHS %DVH 8QLWV
- PP +LJK %DVH 8QLWV ([FOXGHV :RUNWRS
- PP 6ROLG %DVH %DFN 3DQHO
- PP 6ROLG :DOO +RXVLQJ %DFN 3DQHO
- PP 'HHS :DOO 8QLWV
- &RQFHDOHG :DOO +DQJLQJ %UDFNHW
- 3UHPLHU 'HOX[H +HWWLFK $WLUD 7ZLQ :DOO 6RIW &ORVH HHD ZHU %R[LQ $QWKUDFLWH
- +HWWLFK R &OLS 2Q +LQJH ZLWK ,QWHJUDWHG 6RIW &ORVH
- 6HUYLFH *DS PP RQ %DVH 8QLWV
- 6HUYLFH *DS PP RQ :DOO 8QLWV
-)URQWDO 0DWFKHG &RUQHU 6RXWLRQ

35(0,(5
'(/8;(
'5$:(5
6<67(0
9,/$%/(

$17+5$&

6(5,(6_ 285
$6 67$1'$5'

&$%,1(7
&2/2856
9,/$%/(

:+,7(

2XU 6(5,(6_ 285 FDELQHW LV FUDIWHG WR GHOLYHU D VHDPOHVV WUXH KDQGOHOHVV NLWFKHQ H[SHULHQFH :LWK LWV XOWUD PRGHUQ XUE GHVLJQ LW·V VXUH WR PDNH D ODVWLQJ LPSUHVVLRQ $YDLODEOH RU 2Q\[HDFK FDELQHW LQFOXGHV +HWWLFK LQWHJUDWHG VRIW FO GRRUV DQG GUDZHUV DV D VWDQGDUG IHDWXUH

-)XOO\ 5LJLG PP 0)& &DELQHW WR VXLW KDQGOHOHVV V\VWHP
- :KLWH RU 2Q\[,QWHULRU &DELQHW
- PP 'HHS %DVH 8QLWV
- PP +LJK %DVH 8QLWV ([FOXGHV :RUNWRS
- PP 6ROLG %DVH %DFN 3DQHO
- PP 6ROLG :DOO +RXVLQJ %DFN 3DQHO
- PP 'HHS :DOO 8QLWV
- &RQFHDOHG :DOO +DQJLQJ %UDFNHW
- 3UHPLHU 'HOX[H +HWWLFK $WLUD 7ZLQ :DOO 6RIW &ORVH HHD ZHU %R[LQ $QWKUDFLWH
- +HWWLFK R &OLS 2Q +LQJH ZLWK ,QWHJUDWHG 6RIW &ORVH
- 6HUYLFH *DS PP RQ %DVH 8QLWV
- 6HUYLFH *DS PP RQ :DOO 8QLWV
-)URQWDO 0DWFKHG &RUQHU 6RXWLRQ

35(0,(5
'(/8;(
'5$:(5
6<67(0
9,/$%/(

$17+5$&

385,7< 3257)2/,2 /$0,1$7(685)$&(&

$ FROOHFWLRQ RI KLJK SUHVVXUH ODPLQDWH VXUIDFHV HQJLQHHUH

%$1:(//
&/28'

%(8/<
75(9,62

%(8/<
&$/&877$

3*
7+(35(0,(5
'(/8;(
&2//(&7,21

7KLQJV MXVW JRW D OLW
ZLWK RXU UHFHQWO\ ODX
H[RWLF VWRQHV PDUEOH
ODPLQDWHV 6XUIDFHV D
D PP UDGLXV 8SVWDQG
VTXDUH HGJH

'21
786&$1<
0$5%/(

3*
7+(00
648$5(('*('
35(0,(5 3/86
&2//(&7,21

,I \RX DUH ORRNLQJ IRU V
PRUH OX[XULRXV WKHQ F
PP 6TXDUH (GJHG 3UHPL
&RROHFWLRQ :H RIIHU D
ZRRGV DQG PDUEOHV GHV
WKH ODWHVW RQ WUHQG
/HW RXU PP VTXDUH HG
GUDPDWLVH DQG LQVSLU
NLWFKHQ VSDFH $OO XS
KLJK ZLWK D PP SRVW I

(06
786&$1<
0$5%/(

3*
7+(00
648$5(('*('
35(0,(5 3/86
&2//(&7,21

2XU PP VOLPOLQH VTXD
VHOHFWLRQ FUHDWH D ZR
VWUHDPOLQHG ORRN &KI
PDUEOH GHVLJQV WR SHU
NLWFKHQ VSDFH $OO XS
KLJK DQG PP GHHS

3 8 5 , 7 < 3 2 5 7) 2 / , 2 & 2 0 3 $ & 7 / $ 0 , 1 $ 7 (6 8 5) $ & (

&RPSDFW ODPLQDWH VXUIDFHV SURYLGH DQ\ NLWFKHQ ZLWK D VOHH
LQ D UDQJH RI VWRQH DQG PDUEOH ORRN WH[WXUHV D FRPSDFW OD
%HVLGHV EHLQJ EHDXWLIXOO\ FRQWHPSRUDU\ WKHVH VXUIDFHV DU
\HDUV RI XVH JXDUDQWHHG

3 *
7 + (
3 5 (0 , (5
& 2 / / (& 7 , 2 1

6 7 $ 7 8 $ 5 , 2

9 (1 , & (
0 $ 5 % / (

3 *
7 + (
3 5 (0 , (5 3 / 8 6
& 2 / / (& 7 , 2 1

: + , 7 (
$ 8 5 2 5 $

3 *
7 + (
3 5 (0 , (5 ' (/ 8 ; (
& 2 / / (& 7 , 2 1

<

3 8 5 , 7 < 3 2 5 7) 2 / , 2 ' (. / , 7 (6 8 5) $ & (& 2

'(./,7(Š E\ &RVHQWLQR LV WKH ÀUVW XOWUD OLJKW VXUIDFH ZKLFK
VWDLQV 'HYHORSHG ZLWK PP 'HNWRQŠ VODEV DQG D XQLTXH OLJK
LPSDFW DQG ZDWHU SHQHWUDWLRQ

%HVLGHV EHLQJ HDV\ WR FXW DQG LQVWDOO LWV QRQ SRUXV VXU
JLYLQJ :KLOVW SHUIRUPLQJ LPSHFFDEO\ WKHVH UDQJHV DUH D VW

$ (5 , (6

3 *
7 + (
3 5 (0 , (5
& 2 / / (& 7 , 2 1

0 $ 5 , 1 $

3 *
7 + (
3 5 (0 , (5 3 / 8 6
& 2 / / (& 7 , 2 1

3 8 5 , 7 < 3 2 5 7) 2 / , 2 6 2 / , ' $ & 5 < / , & 6 8 5) $ & (

:H O F R P H W R P L Q H U Y D Š W K H K L J K T X D O L W \ D Q G S U D F W L F D O V R L G
G H O L Y H U D O X [X U L R X V D S S H D U D Q F H Z K L F K L V F R R O W R W K H W R X F

P L Q H U Y D Š V R L G V X U I D F H V F R P H Z L W K R X U \ H D U J X D U D Q W H H D Q
$ V X U I D F H W K D W E R W K O R R N V D Q G S H U I R U P V J U H D W P L Q H U Y D Š R I I
U H T X L U H P H Q W I R U V S H F L D O I V W L Q V W D O O D W L R Q

: + , 7 (

, & (
& 5 < 6 7 $ /

* 5 (<
& 5 < 6 7 $ /

, & (
% / 8 (

7 + (
3 5 (0 , (5
& 2 / / (& 7 , 2 1

& $ 5 5 $ 5 $
: + , 7 (

0 $ 5 % / (
: $ 6 +

* 5 (<
6 7 2 5 0

& + $ / .
9 (1 $ 7 2

7 + (
3 5 (0 , (5 3 / 8 6
& 2 / / (& 7 , 2 1

% / 8 (
9 (1 $ 7 2

385,7< 3257)2/,2 62/,' 48$57= 685)$&(&

&RPSDF V 7HFKQRORJLFDO 4XDUW] $ SURGXFW RI H[FHSWLRQDO UH
TXDUW] EXW ZLWK LPSURYHG SHUIRUPDQFH WR ZLWKVWDQG LQWHQV
LGHDO IRU WKH NLWFKHQ $ IDEXORXV FROOHFWLRQ RI FRORXUV

*/$&,$5

92/&$12
/,*+7

7+(
35(0,(5
&2//(&7,21

92/&$12
*5(<